INSPIRED BY EFFICIENCY

CATALOG
DRUM MOTOR
DM 0080

"Inspired by Efficiency"

Smart handling of resources is mandatory for Interroll. Because we are convinced that efficiency is a fundamental value. It drives us to constantly improve products and processes. Efficiency inspires our daily activities.

"Inspired by efficiency" means: We develop products for internal logistics that perfectly adapt to the needs of our customers.

As global market leader in technology and innovation in our industry, we believe that strengthening the business of our customers in a significant and lasting way is our responsibility. For Interroll, the key to success is the consistent pursuit of efficiency.

Symbols

- Drum motor
- Idler pulley
- Options
- Accessories

Contents

The Interroll Group	5
Interroll core products and solutions	6
The highly efficient belt drive	8
Interroll platform for drum motors	10
Drum motor DM 0080	12
Options	38
Accessories	62
Application notes	72

www.interroll.com

© 2017 **INTERROLL**

The Interroll Group is a globally leading supplier of high-quality key products and services for internal logistics. The company, which is listed on the stock exchange and has its headquarters in Switzerland, employs some 2000 people in 32 companies around the globe.

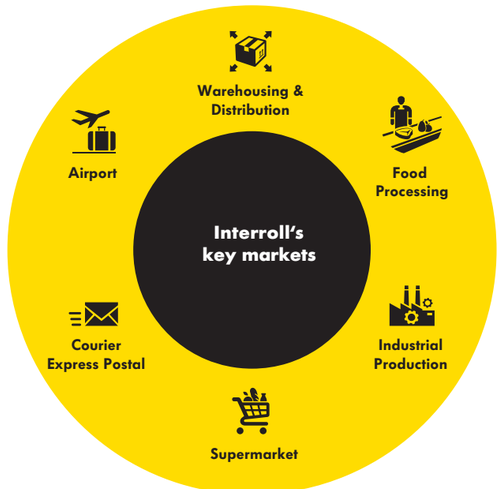

Holding
Sales, Production & Service
Global Competence Centers
Regional Competence Centers

© 2017 INTERROLL
© 2017 INTERROLL

The solutions for our customers' daily logistical challenges are based on Interroll key products that are built on a worldwide common platform.

Conveying
Versatile and reliable core products ensure a dynamic, efficient material flow across all continents and in all industries:

- Conveyor rollers
- Drum motors and idler pulleys
- 24 V drives (RollerDrive)
- Control systems for RollerDrive

They are used to convey, accumulate, feed or remove goods. Powered or with the force of gravity. With or without dynamic pressure. Easy-to-install drive solutions for new plants or for refurbishing existing plants. Excellent products that will pay for themselves and that you can rely on. In every respect.

© 2017 INTERROLL

INTERROLL CORE PRODUCTS
AND SOLUTIONS

Transporting and distributing
Millions of different individual items travel through the world's flow of goods every day and must be delivered on time to the correct destination. This is a trend that requires a performance-based logistics system with efficient material flow systems. Interroll's innovative conveyor modules and subsystems are always ready for key locations in customers' systems:

- Crossbelt sorters
- Belt curves and belt merges
- Conveyor modules with zero-pressure accumulation
- Roller conveyors
- Belt conveyors

Precisely pre-assembled and rapidly delivered for fast, simple integration into the complete system on site (plug and play). The conveyor modules and subsystems provide users with key assurances: excellent availability whilst being easy to use; outstanding efficiency even at low throughput volumes; efficient investment with a short period of return on investment; adaptability in the event of change.

Storage and picking
Economical and user-friendly: the dynamic storage solution that operates without power. It is designed for fast-moving goods (e.g. groceries) that have to be quickly picked and immediately conveyed to consumers. The principle is as simple as it is ingenious. It is known as FIFO, First In – First Out, and guarantees that what has been stored first is also picked first. Or LIFO, Last In – First Out, when the pallet stored last is picked first. It means making maximum use of minimum space. And because the needs of our customers are as diverse as their products, our

- Pallet flow
- Carton flow

peripheral subsystems offer unlimited design options. The picking times can scarcely be beaten. The return on investment for the operator is two to three years and is integrated into "Just in Time".

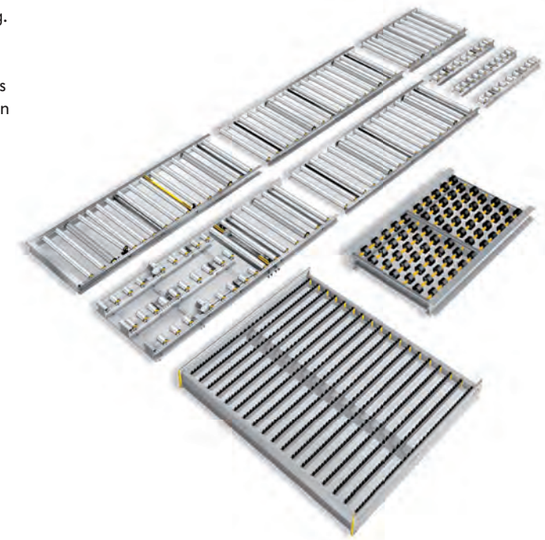

© 2017 INTERROLL

© 2017 INTERROLL

THE HIGHLY EFFICIENT
BELT DRIVE

Compact, robust and absolutely hygienic
Since the drum motor is installed directly in the frame of the conveyor belt in a space-saving way, the transport capacity is maximized given the same base area. Positive side effect: Elegantly designed conveyor belts with evenly distributed weights. The installation or replacement of a drum motor is generally simple and quick using the plug-and-play principle, because only a few components have to be installed - thus saving time and money. In food processing, perfect hygiene and good cleaning options are especially important: This is where the drum motor scores big with its encapsulated design made of stainless steel.

All-rounder with a broad application range
Drum motor applications are varied: When used in friction-driven belts, the motor is cooled directly via the belt tensioned over the drum shell. Modular plastic belts are not tensioned; in this case, the drive is form-fit via sprockets or a profile lagging. Solid homogeneous belts are also positive driven, whereby a profile on the underside of the belt engages in a drum profile made of hygienically certified PU. But it also works entirely without a belt and the drum motor transports the material directly.

Proven principle, efficient drive
In principle, drum motors are energy-efficient because they directly drive the conveyor belt. In addition, they are practically maintenance-free and extremely wear-resistant, thereby significantly reducing the operating costs of the conveyor system and the risk of standstills or breakdowns. By the way: High-quality sealing systems ensure that a drum motor will also run reliably in aggressive environments.
The Interroll synchronous drum motors have a very low power loss of only 9 %. The planetary gear box made of steel transfers 92 – 95 % of the power directly to the conveyor. They are especially suited to applications where a high-torque, dynamic drive, a wide speed range, or high duty cycles are necessary.

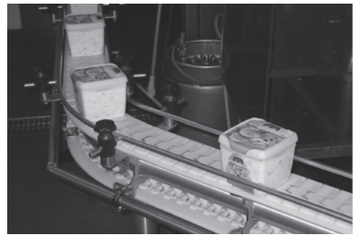

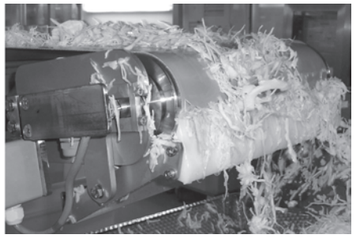

© 2017 INTERROLL

Practice-oriented, scalable, and thought out in detail

The new drum motor platform from Interroll combines the different motor concepts in a single design and makes it easy for customers to build their own and completely individual conveyor system. Since all motors have the same shafts, the number of different parts from the original equipment manufacturer is reduced and conveyor construction is significantly easier. The broad speed spectrum covers all imaginable applications. The clever plug-and-play solution makes installation easier. Each motor is approved, tested, and modularized so that it can be produced and delivered around the world in the shortest amount of time.

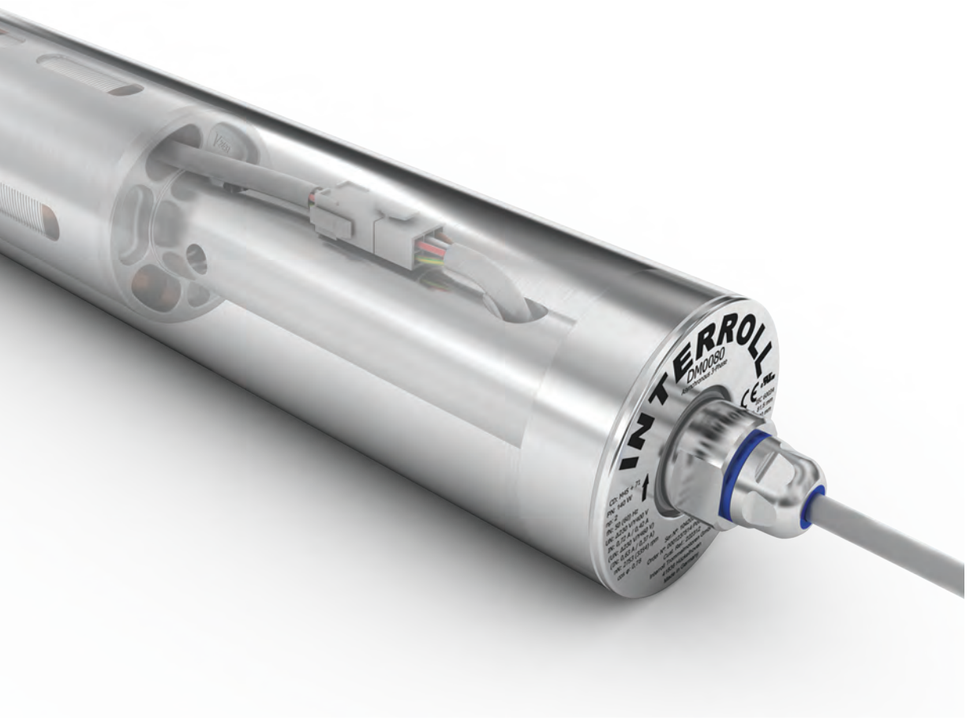

© 2017 INTERROLL

INTERROLL PLATFORM
FOR DRUM MOTORS

Flexibility and robustness make the difference

More performance, more configurability
The broad range of services for the motors covers all conceivable uses in the food industry, intralogistics and manufacturing. All motors are optimized for their application, giving planning personnel the freedom to choose between synchronous and asynchronous designs.

More hygienic
All Interroll Drum Motors of the new generation meet the highest standards of hygiene according to IP69k. This gives users the assurance that the cleaning process meets the highest standard.

Lower costs, more service
The clever plug-and-play wiring solution and simple installation, assembly and maintenance ensure noticeable savings in time and costs, as well as reduced downtimes of the conveyor system. Replacement parts available worldwide through Interroll and service partners make repairs easy and offer a faster, better service.

Tested quality, innovative technology
All motor components are standardized, tested, and approved in elaborate testing. Modularized motor types have been developed for all current applications; they are quickly available and contribute to minimizing costs.

Fewer breakdowns
A stable planetary gear train is enough for a high torque in all motors, holds up against bending, and resists overloads and impact loads. The result is safer, more reliable operation.

More stability
The strong 30 mm shaft and the larger ball bearings on Interroll's new drum motors allow significantly higher belt tensions. It provides a safety net even in cases of a defective belt tracking or overtensioned conveyor belts.

	DM 0080	DM 0080	DM 0080	DM 0080	DM 0080
Motor technology	Asynchronous	Asynchronous	Asynchronous	Asynchronous	Synchronous
No. phase	3 phase	3 phase	1 phase	1 phase	
Diameter	3.21"	3.21"	3.21"	3.21"	3.21"
Gear material	Steel	Technopolymer	Steel	Technopolymer	Steel
Rated power	.054 – .188 HP	.054 – .100 HP	.034 – .148 HP	.034 – .148 HP	.194 – .570 HP
Rated torque	.8 – 35.3 lbf-ft*	1.9 – 12.0 lbf-ft*	.5 – 23.1 lbf-ft	2.7 – 12.6 lbf-ft	1.24 – 38.35 lbf-ft
Max. belt pull	264 lbf*	90 lbf*	173 lbf*	94 lbf*	287 lbf
Speed of the shell	8 – 612 fpm*	17 – 220 fpm*	10 – 490 fpm*	10 – 177 fpm*	16 – 535 fpm
Drum width (FW)	7.56 – 43.31 in	9.13 – 43.31 in	7.56 – 43.31 in	9.13 – 43.31 in	7.28 – 43.31 in
Friction-driven belt	●	●	●	●	●
Positive drive belt	●	–	–	–	●
Without belt	●	–	–	–	●

* At 60 Hz

© 2017 INTERROLL

Practice-oriented, scalable and thought out in detail: The new drum motor DM 0080 makes it easy to build a completely individual conveyor system and is dimensioned for the higher requirements for permissible belt tension from industry and belt manufacturers.

With a broader speed spectrum, the DM 0080 covers all possible applications. The clever plug-and-play connection significantly simplifies the installation. Each motor is approved, tested, and modularized so that it can be produced and delivered around the world in the shortest amount of time.

The modular design of the DM 0080 allows a free combination of individual module groups, such as shaft, end cover, shell, steel or technopolymer gear, asynchronous or synchronous motor winding, to perfectly meet the requirements of an application. In addition, various options, such as encoder, brake, backstop, rubber laggings, etc., as well as different accessories are available.

With the platform concept of the DM 0080, it is possible to cover all internal logistics applications in the food processing sector, as well as in industry, distribution and airports.

© 2017 **INTERROLL**

Technical data

	Asynchronous squirrel cage motor	**AC synchronous permanent magnet motor**
Insulation class of motor windings	Class F, IEC 34 (VDE 0530)	Class F, IEC 34 (VDE 0530)
Voltage	230/460 V ±5 % (IEC 34/38) Most of the common international voltages and frequencies are available upon request	230 or 460 V
Frequency	60 Hz	200 Hz
Shaft seal, internal	NBR	NBR
Protection rate	IP69K	IP69K
Thermal protection	Bi-metal switch	Bi-metal switch
Operating mode	S1	S1
Ambient temperature, 3-phase motor	36 to 104 °F Low temperature ranges on request	36 to 104 °F Low temperature ranges on request
Ambient temperature, 3-phase motor for applications with positive drive belts or no belts	36 to 77 °F	36 to 104 °F
Max. drum width FW	43.31 in Other drum widths on request	43.31 in Other drum widths on request

Design variants and accessories

Laggings	Lagging for friction drive belts Lagging for modular plastic belts Lagging for positive drive solid homogeneous belts
Sprockets	Sprockets for modular plastic belts
Options	Backstop Electromagnetic holding brake and rectifier Encoders Balancing Plug connection
Oils	Food-grade oils (EU, FDA)
Certificate	cULus safety certificates (1-phase motors and straight plug connections starting Q3/2017)
Accessories	Idler pulleys; conveyor rollers; mounting brackets; cables; inverters

A combination of encoder and safety holding brake is not possible. In addition, the use of a holding brake or backstop with a synchronous motor is technically not necessary.

© 2017 **INTERROLL**

Material variants

The following components can be selected for the drum motor and the electrical connection.
The combination of components depends on the material used.

Component	Version	Aluminum	Mild steel	Stainless steel	Brass/nickel	Technopolymer
Shell	Crowned		●	●		
	Cylindrical		●	●		
	Cylindrical + key for sprockets		●	●		
End housing	Standard	●		●		
Shaft	Standard		●	●		
	Cross-drilled thread		●	●		
Gear boxes	Planetary gear box		●			●
Electrical connector	Straight connector			●	●	●
	Straight hygienic connector			●		
	Elbow connector			●		●
	Terminal box	●		●		
	Straight plug connection			●		
Motor winding	Asynchronous motor					
	Synchronous motor					
External seal	PTFE					

© 2017 **INTERROLL**

DRUM MOTOR
DM 0080

Motor variants

Mechanical data for synchronous motors with steel gear

P_N [HP]	np	gs	i	v [ft/min]	n_A [min^{-1}]	M_A [lbf*ft]	F_N [lbf]	M_{MAX}/M_A	FW_{MIN} [in]	SL_{MIN} [in]
0.194	8	3	164.23	15	18.3	48	358	1.4	8.31	8.03
0.194	8	3	119.83	21	25.0	35	262	2.1	8.31	8.03
0.194	8	3	103.89	24	28.9	30	227	2.5	8.31	8.03
0.194	8	3	85.34	30	35.2	25	186	3.0	8.31	8.03
0.194	8	2	62.7	40	47.8	19	143	2.2	7.56	7.28
0.194	8	2	53.63	47	55.9	16	122	2.5	7.56	7.28
0.194	8	2	42.28	60	71.0	13	97	3.0	7.56	7.28
0.194	8	2	38.5	65	77.9	12	88	3.0	7.56	7.28
0.194	8	2	31.35	80	95.7	10	72	3.0	7.56	7.28
0.194	8	2	26.94	94	111.4	8	62	3.0	7.56	7.28
0.194	8	2	20.27	124	148.0	6	46	3.0	7.56	7.28
0.194	8	2	14.44	175	207.8	4	33	3.0	7.56	7.28
0.194	8	2	11.23	224	267.1	3	26	3.0	7.56	7.28
0.194	8	1	8.25	306	363.6	3	20	3.0	7.56	7.28
0.194	8	1	4.71	535	636.9	2	11	3.0	7.56	7.28
0.400	8	2	53.63	47	55.9	34	253	1.2	8.74	8.46
0.400	8	2	42.28	60	71.0	27	199	1.5	8.74	8.46
0.400	8	2	38.5	65	77.9	24	182	1.6	8.74	8.46
0.400	8	2	31.35	80	95.7	20	148	3.0	8.74	8.46
0.400	8	2	26.94	94	111.4	17	127	3.0	8.74	8.46
0.400	8	2	20.27	124	148.0	13	96	3.0	8.74	8.46
0.400	8	2	14.44	175	207.8	9	68	3.0	8.74	8.46
0.400	8	2	11.23	224	267.1	7	53	3.0	8.74	8.46
0.400	8	1	8.25	306	363.6	5	41	3.0	8.74	8.46
0.400	8	1	4.71	535	636.9	3	23	3.0	8.74	8.46

© 2017 **INTERROLL**

P_N [HP]	np	gs	i	v [ft/min]	n_A [min^{-1}]	M_A [lbf*ft]	F_N [lbf]	M_{MAX}/M_A	FW_{MIN} [in]	SL_{MIN} [in]
0.570	8	2	38.5	65	77.9	35	258	1.6	7.56	7.28
0.570	8	2	31.35	80	95.7	28	210	2.6	9.92	9.65
0.570	8	2	26.94	94	111.4	24	181	3.0	9.92	9.65
0.570	8	2	20.27	124	148.0	18	136	3.0	9.92	9.65
0.570	8	2	14.44	175	207.8	13	97	3.0	9.92	9.65
0.570	8	2	11.23	224	267.1	10	75	3.0	9.92	9.65
0.570	8	1	8.25	306	363.6	8	58	2.5	9.92	9.65
0.570	8	1	4.71	535	636.9	4	33	3.0	9.92	9.65

P_N = Rated power
np = Number of poles
gs = Gear stages
i = Speed ratio
v = Speed
n_A = Shell rated speed
M_A = Drum motor rated torque
F_N = Drum motor rated belt pull
M_{MAX}/M_A = Ratio of max. acceleration torque to rated torque
FW_{MIN} = Minimum drum width
SL_{MIN} = Minimum shell length

© 2017 INTERROLL

DRUM MOTOR
DM 0080

Electrical data for synchronous motors

P_N [W]	np	U_N [V]	I_N [A]	I_0 [A]	I_{MAX} [A]	f_N [Hz]	η	n_N [rpm]	J_R [kgcm²]	M_N [Nm]	M_0 [Nm]	M_{MAX} [Nm]	R_M [Ω]	L_{SD} [mH]	L_{SQ} [mH]	k_e [V/krpm]	T_e [ms]	k_{TN} [Nm/A]	U_{SH} [V]
145	8	230	0.81	0.81	2.43	200	0.85	3000	0.14	0.46	0.46	1.38	21.6	45.60	53.70	41.57	4.97	0.57	25
145	8	400	0.47	0.47	1.41	200	0.83	3000	0.14	0.46	0.46	1.38	62.5	130.7	138.0	72.23	4.41	0.98	36
298	8	230	1.30	1.30	3.90	200	0.86	3000	0.28	0.95	0.95	2.85	10.2	27.80	29.30	47.46	5.75	0.73	19
298	8	400	0.78	0.78	2.34	200	0.87	3000	0.28	0.95	0.95	2.85	29.1	81.90	94.10	83.09	6.48	1.22	32
425	8	230	2.30	2.30	6.90	200	0.87	3000	0.42	1.35	1.35	4.05	5.66	16.26	19.42	45.81	6.86	0.59	19
425	8	400	1.32	1.32	3.96	200	0.86	3000	0.42	1.35	1.35	4.05	17.6	49.80	59.00	80.80	6.70	1.02	33

P_N = Rated power
np = Number of poles
gs = Gear stages
i = Speed ratio
v = Speed
n_A = Shell rated speed
M_A = Drum motor rated torque
F_N = Drum motor rated belt pull
M_{MAX}/M_A = Ratio of max. acceleration torque to rated torque
FW_{MIN} = Minimum drum width
SL_{MIN} = Minimum shell length

© 2017 INTERROLL

Mechanical data for 3-phase asynchronous motor with steel gear

P_N [HP]	np	gs	i	v [ft/min]	n_A [min^{-1}]	M_A [lbf*ft]	F_N [lbf]	FW_{MIN} [in]	SL_{MIN} [in]
0.054	4	3	164.23	8	7.8	25	187	8.62	8.35
0.054	4	3	119.83	12	10.7	18	136	8.62	8.35
0.054	4	3	103.89	13	12.3	16	118	8.62	8.35
0.054	4	3	85.34	16	15.0	13	97	8.62	8.35
0.054	4	2	62.70	22	20.4	10	75	7.87	7.60
0.054	4	2	53.63	26	23.8	9	64	7.87	7.60
0.054	4	2	42.28	33	30.2	7	50	7.87	7.60
0.054	4	2	38.50	36	33.2	6	46	7.87	7.60
0.054	4	2	31.35	44	40.8	5	37	7.87	7.60
0.054	4	2	26.94	52	47.4	4	32	7.87	7.60
0.054	4	2	20.27	69	63.0	3	24	7.87	7.60
0.054	4	2	14.44	96	88.5	2	17	7.87	7.60
0.054	4	2	11.23	124	113.8	2	13	7.87	7.60
0.054	4	1	8.25	169	154.9	1	10	7.87	7.60
0.054	4	1	4.71	296	271.3	1	6	7.87	7.60
0.101	2	3	164.23	18	16.2	23	168	8.62	8.35
0.101	2	3	119.83	24	22.2	16	123	8.62	8.35
0.101	2	3	103.89	28	25.6	14	106	8.62	8.35
0.101	2	3	85.34	34	31.2	12	87	8.62	8.35
0.101	2	2	62.70	46	42.4	9	67	7.87	7.6
0.101	2	2	53.63	54	49.6	8	58	7.87	7.6
0.101	2	2	42.28	68	62.9	6	45	7.87	7.6
0.101	2	2	38.50	75	69.1	6	41	7.87	7.6
0.101	2	2	31.35	92	84.8	4	34	7.87	7.6
0.101	2	2	26.94	107	98.7	4	29	7.87	7.6
0.101	2	2	20.27	142	131.2	3	22	7.87	7.6
0.101	2	2	14.44	200	184.1	2	15	7.87	7.6
0.101	2	2	11.23	257	236.8	2	12	7.87	7.6
0.101	2	1	8.25	349	322.3	1	9	7.87	7.6
0.101	2	1	4.71	612	564.5	1	5	7.87	7.6
0.107	4	3	119.83	12	10.9	35	264	10.59	10.31
0.107	4	3	103.89	13	12.6	31	229	10.59	10.31

© 2017 INTERROLL

P_N [HP]	np	gs	i	v [ft/min]	n_A [min^{-1}]	M_A [lbf*ft]	F_N [lbf]	FW_{MIN} [in]	SL_{MIN} [in]
0.107	4	3	85.34	16	15.3	25	188	10.59	10.31
0.107	4	2	62.70	22	20.9	19	144	9.84	9.57
0.107	4	2	53.63	26	24.4	17	124	9.84	9.57
0.107	4	2	42.28	33	30.9	13	97	9.84	9.57
0.107	4	2	38.50	36	34.0	12	89	9.84	9.57
0.107	4	2	31.35	44	41.7	10	72	9.84	9.57
0.107	4	2	26.94	52	48.6	8	62	9.84	9.57
0.107	4	2	20.27	69	64.5	6	47	9.84	9.57
0.107	4	2	14.44	96	90.6	4	33	9.84	9.57
0.107	4	2	11.23	124	116.5	3	26	9.84	9.57
0.107	4	1	8.25	169	158.5	3	20	9.84	9.57
0.107	4	1	4.71	296	277.7	2	11	9.84	9.57
0.188	2	3	119.83	24	23.0	30	223	10.59	10.31
0.188	2	3	103.89	28	26.5	26	193	10.59	10.31
0.188	2	3	85.34	34	32.3	21	159	10.59	10.31
0.188	2	2	62.70	46	43.9	16	122	9.84	9.57
0.188	2	2	53.63	54	51.3	14	104	9.84	9.57
0.188	2	2	42.28	68	65.1	11	82	9.84	9.57
0.188	2	2	38.50	75	71.5	10	75	9.84	9.57
0.188	2	2	31.35	92	87.8	8	61	9.84	9.57
0.188	2	2	26.94	107	102.2	7	52	9.84	9.57
0.188	2	2	20.27	142	135.8	5	39	9.84	9.57
0.188	2	2	14.44	200	190.7	4	28	9.84	9.57
0.188	2	2	11.23	257	245.1	3	22	9.84	9.57
0.188	2	1	8.25	349	333.7	2	17	9.84	9.57
0.188	2	1	4.71	612	584.5	1	10	9.84	9.57

For applications with positive driven belts or applications without belt, the power must be reduced by 17 %.

P_N = Rated power
np = Number of poles
gs = Gear stages
i = Speed ratio
v = Speed
n_A = Shell rated speed
M_A = Drum motor rated torque
F_N = Drum motor rated belt pull
FW_{MIN} = Minimum drum width
SL_{MIN} = Minimum shell length

© 2017 INTERROLL

DRUM MOTOR
DM 0080

Mechanical data for 3-phase asynchronous motor with technopolymer gear

P_N [HP]	np	gs	i	v [ft/min]	n_A [min^{-1}]	M_A [lbf*ft]	F_N [lbf]	FW_{MIN} [in]	SL_{MIN} [in]
0.054	4	3	78.55	18	16.3	12	89	9.41	9.13
0.054	4	3	71.56	19	17.9	11	81	9.41	9.13
0.054	4	3	63.51	22	20.1	10	72	9.41	9.13
0.054	4	3	52.92	26	24.1	8	60	9.41	9.13
0.054	4	3	48.79	29	26.2	7	56	9.41	9.13
0.054	4	3	43.3	32	29.5	7	49	9.41	9.13
0.054	4	2	19.2	73	66.6	3	23	9.41	9.13
0.054	4	2	16	87	79.9	3	19	9.41	9.13
0.054	4	2	13.09	106	97.6	2	16	9.41	9.13
0.101	2	3	78.55	37	33.9	11	80	9.41	9.13
0.101	2	3	71.56	40	37.2	10	73	9.41	9.13
0.101	2	3	63.51	45	41.9	9	65	9.41	9.13
0.101	2	3	52.92	54	50.2	7	54	9.41	9.13
0.101	2	3	48.79	59	54.5	7	50	9.41	9.13
0.101	2	3	43.3	67	61.4	6	44	9.41	9.13
0.101	2	2	19.2	150	138.5	3	21	9.41	9.13
0.101	2	2	16	180	166.2	2	17	9.41	9.13
0.101	2	2	13.09	220	203.1	2	14	9.41	9.13

For applications with positive driven belts or applications without belt, this combination of motor and gear box is not recommended.

P_N = Rated power
np = Number of poles
gs = Gear stages
i = Speed ratio
v = Speed
n_A = Shell rated speed
M_A = Drum motor rated torque
F_N = Drum motor rated belt pull
FW_{MIN} = Minimum drum width
SL_{MIN} = Minimum shell length

Electrical data for 3-phase asynchronous motor

P_N [W]	np	n_N [min^{-1}]	f_N [Hz]	U_N [V]	I_N [A]	cosφ	η	J_R [kgcm²]	I_S/I_N	M_S/M_N	M_P/M_N	M_B/M_N	M_N [Nm]	R_M [Ω]	$U_{SH\Delta}$ [V]	U_{SHY} [V]
40	4	1555	60	230	0.33	0.72	0.43	0.67	1.89	1.34	1.34	1.43	0.25	294.5	34.99	–
40	4	1644	60	460	0.21	0.61	0.4	0.67	1.98	1.85	1.85	2.08	0.23	294.5	–	56.59
75	2	3248	60	230	0.37	0.85	0.6	0.67	3.00	1.54	1.54	1.68	0.22	164.4	25.85	–
75	2	3376	60	460	0.21	0.73	0.61	0.67	3.52	2.03	2.03	2.39	0.21	164.4	–	37.80
80	4	1571	60	230	0.55	0.69	0.53	1.25	2.17	1.42	1.42	1.55	0.49	132.5	25.14	–
80	4	1658	60	460	0.34	0.57	0.51	1.25	2.40	2.09	2.09	2.25	0.46	132.5	–	38.52
140	2	3354	60	230	0.63	0.81	0.69	1.25	3.84	1.75	1.75	1.91	0.40	72.7	18.55	–
140	2	3430	60	460	0.37	0.69	0.68	1.25	4.45	2.48	2.48	2.67	0.39	72.7	–	27.84

P_N = Rated power
n_P = Number of poles
n_N = Rated speed of rotor
f_N = Rated frequency
U_N = Rated voltage
I_N = Rated current
cosφ = Power factor
η = Efficiency
J_R = Rotor moment of inertia
I_S/I_N = Ratio of startup current - rated current
M_S/M_N = Ratio of startup torque - rated torque
M_B/M_N = Ratio of pull-out torque - rated torque
M_P/M_N = Ratio of pull-up torque - rated torque
M_N = Rated torque of rotor
R_M = Branch resistance
$U_{SH\Delta}$ = Heater voltage in delta connection
U_{SHY} = Heater voltage in star connection

© 2017 INTERROLL
© 2017 INTERROLL

Mechanical data for 1-phase asynchronous motor with steel gear

P_N [HP]	np	gs	i	v [ft/min]	n_A [1/min]	M_A [lbf*ft]	F_N [lbf]	FW_{MIN} [in]	SL_{MIN} [in]
0.034	4	3	119.83	11	11.0	10.9	82	10.59	10.31
0.034	4	3	103.89	13	12.7	9.5	71	10.59	10.31
0.034	4	3	85.34	16	15.5	7.8	58	10.59	10.31
0.034	4	2	62.7	21	21.1	6	45	9.84	9.57
0.034	4	2	53.63	25	24.6	5.1	38	9.84	9.57
0.034	4	2	42.28	31	31.2	4	30	9.84	9.57
0.034	4	2	38.5	35	34.3	3.7	28	9.84	9.57
0.034	4	2	31.35	42	42.1	3	22	9.84	9.57
0.034	4	2	26.94	49	49.0	2.6	19	9.84	9.57
0.034	4	2	20.27	66	65.1	1.9	14	9.84	9.57
0.034	4	2	14.44	92	91.4	1.4	10	9.84	9.57
0.034	4	2	11.23	118	117.5	1.1	8	9.84	9.57
0.034	4	1	8.25	161	160.0	0.8	6	9.84	9.57
0.034	4	1	4.71	282	280.3	0.5	4	9.84	9.57
0.101	2	3	119.83	23	22.9	15.8	118	10.59	10.31
0.101	2	3	103.89	27	26.5	13.7	103	10.59	10.31
0.101	2	3	85.34	32	32.2	11.3	84	10.59	10.31
0.101	2	2	62.7	44	43.9	8.7	65	9.84	9.57
0.101	2	2	53.63	52	51.3	7.4	55	9.84	9.57
0.101	2	2	42.28	66	65.0	5.8	44	9.84	9.57
0.101	2	2	38.5	72	71.4	5.3	40	9.84	9.57
0.101	2	2	31.35	88	87.7	4.3	32	9.84	9.57
0.101	2	2	26.94	103	102.1	3.7	28	9.84	9.57
0.101	2	2	20.27	137	135.7	2.8	21	9.84	9.57
0.101	2	2	14.44	192	190.4	2	15	9.84	9.57
0.101	2	2	11.23	247	244.9	1.6	12	9.84	9.57
0.101	2	1	8.25	336	333.3	1.2	9	9.84	9.57
0.101	2	1	4.71	588	583.9	0.7	5	9.84	9.57
0.114	2	3	119.83	23	22.9	18.2	136	10.59	10.31
0.114	2	3	103.89	27	26.5	15.8	118	10.59	10.31
0.114	2	3	85.34	32	32.2	13	97	10.59	10.31
0.114	2	2	62.7	44	43.9	10	75	9.84	9.57

© 2017 **INTERROLL**

P_N [HP]	np	gs	i	v [ft/min]	n_A [1/min]	M_A [lbf*ft]	F_N [lbf]	FW_{MIN} [in]	SL_{MIN} [in]
0.114	2	2	53.63	52	51.3	9	64	9.84	9.57
0.114	2	2	42.28	66	65.0	7	50	9.84	9.57
0.114	2	2	38.5	72	71.4	6	46	9.84	9.57
0.114	2	2	31.35	88	87.7	5	37	9.84	9.57
0.114	2	2	26.94	103	102.1	4	32	9.84	9.57
0.114	2	2	20.27	137	135.7	3	24	9.84	9.57
0.114	2	2	14.44	192	190.4	2	17	9.84	9.57
0.114	2	2	11.23	247	244.9	2	13	9.84	9.57
0.114	2	1	8.25	336	333.3	1	10	9.84	9.57
0.114	2	1	4.71	588	583.9	1	6	9.84	9.57
0.148	2	3	119.83	23	23.0	23	173	10.59	10.31
0.148	2	3	103.89	27	26.5	20	150	10.59	10.31
0.148	2	3	85.34	32	32.2	17	123	10.59	10.31
0.148	2	2	62.7	44	43.9	13	95	9.84	9.57
0.148	2	2	53.63	52	51.3	11	81	9.84	9.57
0.148	2	2	42.28	66	65.0	9	64	9.84	9.57
0.148	2	2	38.5	72	71.4	8	58	9.84	9.57
0.148	2	2	31.35	88	87.7	6	47	9.84	9.57
0.148	2	2	26.94	103	102.1	5	41	9.84	9.57
0.148	2	2	20.27	137	135.7	4	31	9.84	9.57
0.148	2	2	14.44	192	190.5	3	22	9.84	9.57
0.148	2	2	11.23	247	244.9	2	17	9.84	9.57
0.148	2	1	8.25	336	333.4	2	13	9.84	9.57
0.148	2	1	4.71	588	583.9	1	8	9.84	9.57

For applications with positive driven belts or applications without belt, this combination of motor and gear box is not recommended.

P_N = Rated power
np = Number of poles
gs = Gear stages
i = Speed ratio
v = Speed
n_A = Shell rated speed
M_A = Drum motor rated torque
F_N = Drum motor rated belt pull
M_{MAX}/M_A = Ratio of max. acceleration torque to rated torque
FW_{MIN} = Minimum drum width
SL_{MIN} = Minimum shell length

© 2017 **INTERROLL**

Mechanical data for 1-phase asynchronous motor with technopolymer gear

P_N [HP]	np	gs	i	v [ft/min]	n_A [1/min]	M_A [lbf*ft]	F_N [lbf]	FW_{MIN} [in]	SL_{MIN} [in]
0.034	4	3	115.2	12	11.5	10.5	78	11.3	11.02
0.034	4	3	96	14	13.8	8.7	65	11.3	11.02
0.034	4	3	78.55	17	16.8	7.1	53	11.3	11.02
0.034	4	3	71.56	19	18.4	6.5	49	11.3	11.02
0.101	2	3	96	29	28.6	12.6	94	11.3	11.02
0.101	2	3	78.55	35	35	10.3	77	11.3	11.02
0.101	2	3	71.56	39	38.4	9.4	70	11.3	11.02
0.101	2	3	63.51	44	43.3	8.4	62	11.3	11.02
0.114	2	3	78.55	35	35	11.9	89	11.3	11.02
0.114	2	3	71.56	39	38.4	10.9	81	11.3	11.02
0.114	2	3	63.51	44	43.3	9.6	72	11.3	11.02
0.148	2	3	63.51	44	43.3	12.2	91	11.3	11.02
0.148	2	3	52.92	52	52	10.1	76	11.3	11.02
0.148	2	3	48.79	57	56.4	9.4	70	11.3	11.02
0.148	2	3	43.3	64	63.5	8.3	62	11.3	11.02
0.148	2	2	19.2	144	143.2	3.9	29	11.3	11.02
0.148	2	2	16	173	171.9	3.2	24	11.3	11.02
0.148	2	2	13.09	212	210.1	2.7	20	11.3	11.02

For applications with positive driven belts or applications without belt, this combination of motor and gear box is not recommended.

P_N = Rated power
np = Number of poles
gs = Gear stages
i = Speed ratio
v = Speed
n_A = Shell rated speed
M_A = Drum motor rated torque
F_N = Drum motor rated belt pull
M_{MAX}/M_A = Ratio of max. acceleration torque to rated torque
FW_{MIN} = Minimum drum width
SL_{MIN} = Minimum shell length

© 2017 INTERROLL

DRUM MOTOR
DM 0080

Electrical data for 1-phase asynchronous motor

P_N [W]	np	U_N [V]	I_N [A]	cosφ	η	J_R [kgcm²]	I_S/I_N	M_S/M_N	M_B/M_N	M_P/M_N	R_M [Ω]	$U_{SH\sim}$ [V DC]	C_R [µF]
25	4	230	0.39	1.00	0.28	1.2	2.2	1.11	1.37	1.11	150.0	44	3
50	2	230	0.54	1.00	0.4	0.9	3.1	0.94	1.71	0.94	82.0	33	3
75	2	230	0.68	1.00	0.48	1.0	3.2	0.74	1.37	0.74	66.0	34	4
85	2	230	0.73	0.98	0.53	1.3	5.2	0.93	1.6	0.93	52.0	28	6
110	2	230	0.94	1.00	0.51	1.2	2.0	0.73	1.15	0.73	51.0	36	8

P_N = Rated power
np = Number of poles
U_N = Rated voltage
I_N = Rated current
cosφ = Power factor
η = Efficiency
J_R = Rotor moment of inertia
I_S/I_N = Ratio of startup current - rated current
M_S/M_N = Ratio of startup torque - rated torque
M_B/M_N = Ratio of pull-out torque - rated torque
M_P/M_N = Ratio of pull-up torque - rated torque
R_M = Branch resistance
$U_{SH\sim}$ = Heater voltage for DC units
C_R = Capacitor size

© 2017 INTERROLL

Belt tension diagrams

Belt tension depending on drum width

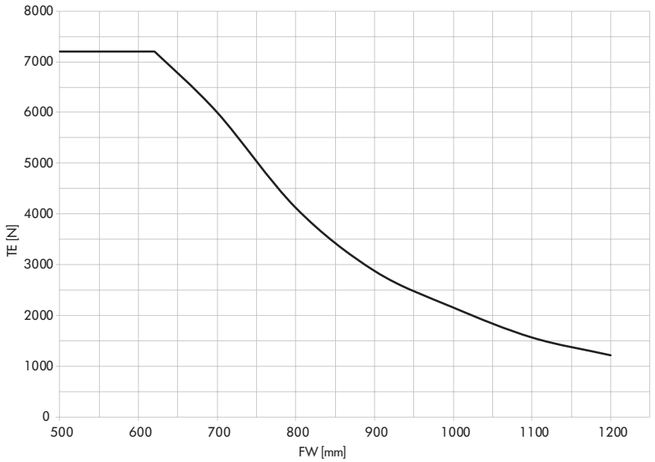

Belt tension depending on rated speed of shell

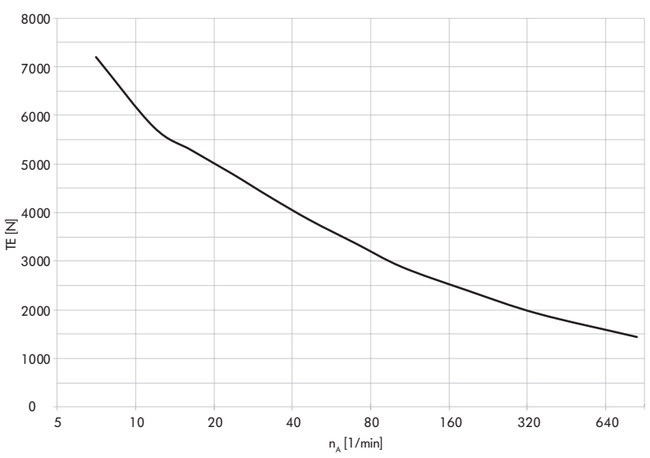

Note: The correct value for the maximum permissible belt tension is determined from the speed of the drum motor. When selecting the motor, also check whether the maximum permissible TE value fits the desired drum width (FW).

TE = Belt tension
n_A = Shell rated speed
FW = Drum width

© 2017 INTERROLL

DRUM MOTOR
DM 0080

Dimensions

Drum motor

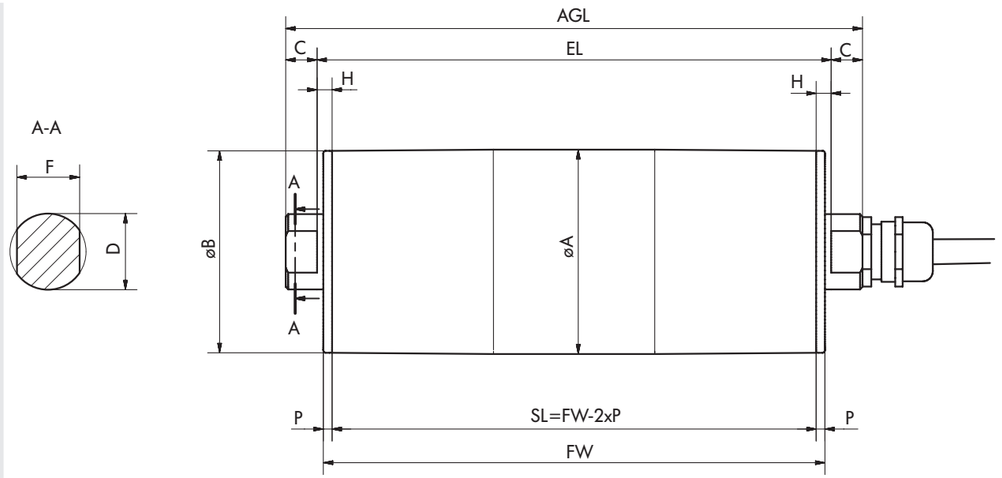

Type	A [mm]	B [mm]	C [mm]	D [mm]	F [mm]	H [mm]	P [mm]	SL [mm]	EL [mm]	AGL [mm]
DM 0080 crowned	81.5	80.5	12.5	30	25	6	3.5	FW - 7	FW + 5	FW + 30
	81.5	80.5	12.5	25*	20	6	3.5	FW - 7	FW + 5	FW + 30
	81.5	80.5	12.5	17*	13.5	6	3.5	FW - 7	FW + 5	FW + 30
DM 0080 cylindrical	81	81	12.5	30	25	6	3.5	FW - 7	FW + 5	FW + 30
	81	81	12.5	25*	20	6	3.5	FW - 7	FW + 5	FW + 30
	81	81	12.5	17*	13.5	6	3.5	FW - 7	FW + 5	FW + 30
DM 0080 cylindrical + key	81.7	81.7	12.5	30	25	6	3.5	FW - 7	FW + 5	FW + 30
	81.7	81.7	12.5	25*	20	6	3.5	FW - 7	FW + 5	FW + 30
	81.7	81.7	12.5	17*	13.5	6	3.5	FW - 7	FW + 5	FW + 30

© 2017 INTERROLL

Cable connections

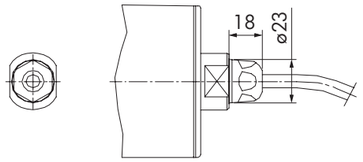

Fig.: Straight hygienic connector, IP69k stainless steel

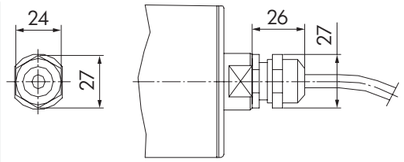

Fig.: Straight connector, brass or stainless steel

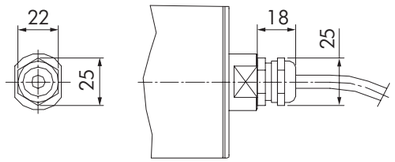

Fig.: Straight EMC connector, brass or stainless steel

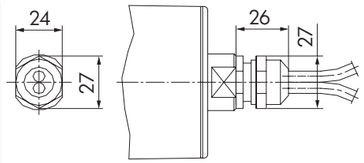

Fig.: Straight connector for encoder, brass or stainless steel

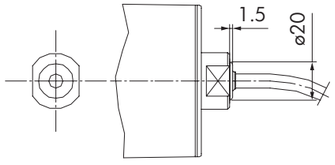

Fig.: Straight connector, shaft cap made of PU

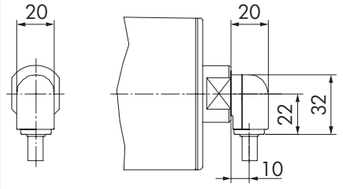

Fig.: Elbow connector, Technopolymer

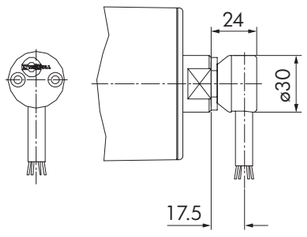

Fig.: Elbow connector, stainless steel, also for encoders

© 2017 **INTERROLL**

DRUM MOTOR
DM 0080

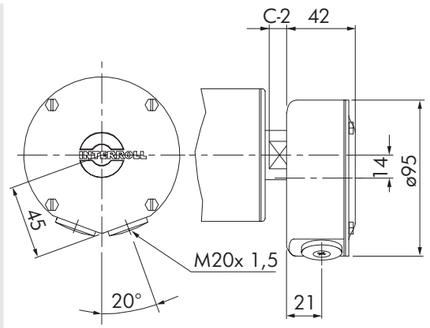

Fig.: Terminal box, stainless steel

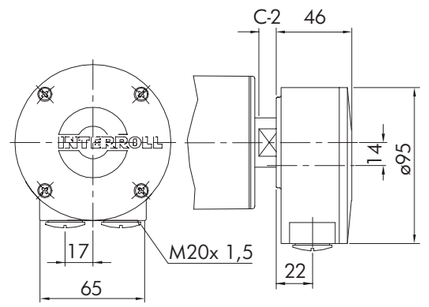

Fig.: Terminal box, aluminum

The minimum length of the drum motor with options increases as follows:

Brake:	Min. FW + 59 mm
Feedback device:	Min. FW + 58 mm
Cable specification:	page 35
Available cable lengths:	1 m, 3 m, 5 m, 10 m

© 2017 **INTERROLL**

Specification for straight plug connection (hygienic design)

The new plug connection is the ideal solution for a quick initial installation and significantly less maintenance effort. Connecting and disconnecting the cables to the motor is simple and can be performed safely and very quickly in just a few steps. Complete disassembly is not needed for motor maintenance or the replacement of a damaged cable. Only the pressing screw and the shell nipple must be loosened and completely unscrewed from the shaft end. Then the connector can easily be pulled out. The assembly is just as simple, in reverse order: The connector engages in the intended position. Then the shell nipple and pressing screw are screwed in and firmly tightened to the block.

Technical data

Shaft design	Only for 30 mm shaft diameter and 25 mm width across flats
Materials	Stainless steel, TPU seals
Connection	Star/delta configuration with thermal controller contact (shield optional)
Cable lengths	1 m, 3 m, 5 m, 10 m
Delivery	Cable not installed, screw components installed on cable
Electrical data	According to DIN EN 61984
Voltage	230/460 V
Amperage	Max. 5 A
Temperature range	36 to 104 °F Lower temperatures on request
Protection rate	IP69k after complete assembly
Hygiene requirement	Suitable for cleaning with high-pressure cleaner
Directives	CE certified, EHEDG certified, use of chemicals permissible according to ECOLAB
Mounting tool	Open-end wrench 14 mm and 20 mm

The minimum length of the drum motor with plug connection increases by 59 mm.

Dimensions

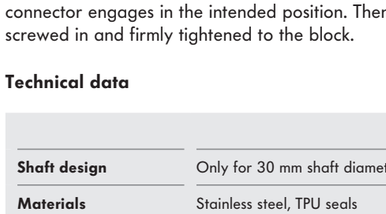

Fig.: Straight plug connection, qualified for hygienic cleaning, IP69k, stainless steel

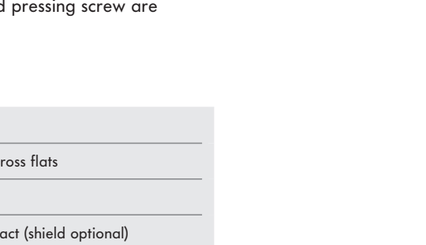

Fig.: Mounting dimensions with a mounting tool

© 2017 INTERROLL

Connection diagrams

Abbreviations

ye/gn	= yellow/green	or	= orange
bn	= brown	vi	= violet
bk	= black	rd	= red
gy	= gray	wh	= white
bu	= blue	FI	= Frequency inverter
TC	= Thermal controller (thermal motor protection switch)	NC	= Not connected
BR	= Electromagnetic brakes		

Rotation

Note: The rotational direction of the drum motor is shown on the connection diagrams. The rotation indicated is correct when looking at the motor from the connection side.

Cable connections synchronous motor

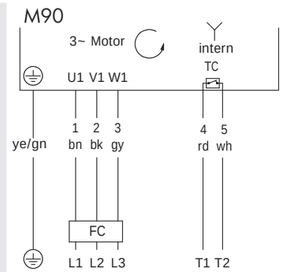

Fig.: 3-phase, 4+2-core cable, winding for 1 voltage, star connection

Terminal box for synchronous motor

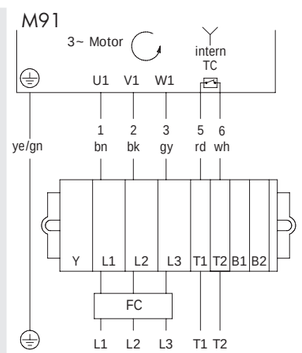

Fig.: 3-phase, 4+2-core cable, winding for 1 voltage, star connection

© 2017 INTERROLL

Cable connections 3-phase asynchronous motor

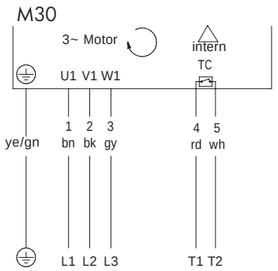

Fig.: 3-phase, 4+2 core cable, winding for 1 voltage, delta connection

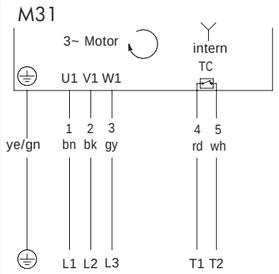

Fig.: 3-phase, 4+2-core cable, winding for 1 voltage, star connection

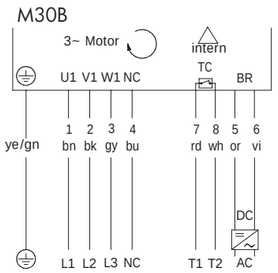

Fig.: With brake, 3-phase, 7+2 core cable, winding for 1 voltage, delta connection

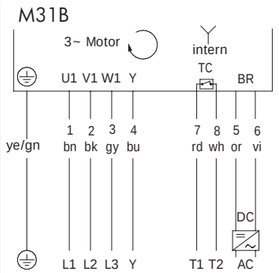

Fig.: With brake, 3-phase, 7+2 core cable, winding for 1 voltage, star connection

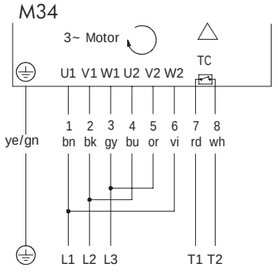

Fig.: 3-phase, 7+2 core cable, winding for 2 voltages, delta connection

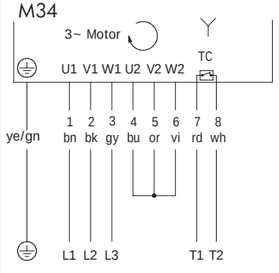

Fig.: 3-phase, 7+2-core cable, winding for 2 voltages, star connection

© 2017 INTERROLL

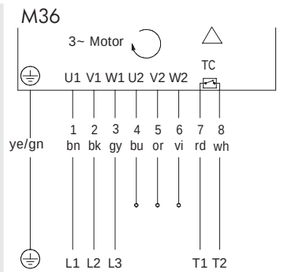

Fig.: 3-phase, 7+2 core cable, 2 speeds, delta connection

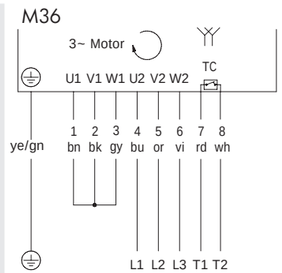

Fig.: 3-phase, 7+2 core cable, 2 speeds, double-star connection

Terminal box 3-phase asynchronous motor

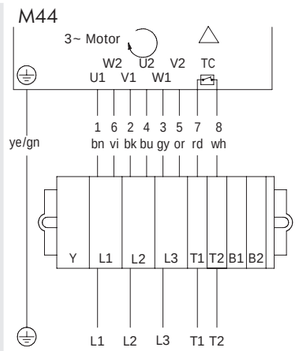

Fig.: 3-phase, winding for 2 voltages, delta connection

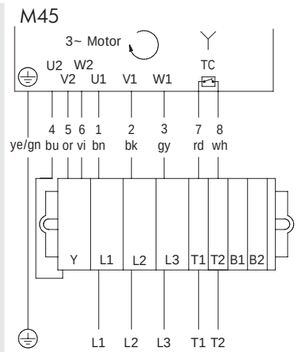

Fig.: 3-phase, winding for 2 voltages, star connection

© 2017 INTERROLL

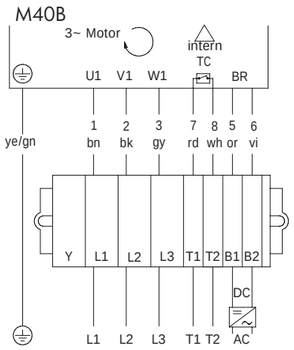

Fig.: With brake, 3-phase, winding for 1 voltage, delta connection

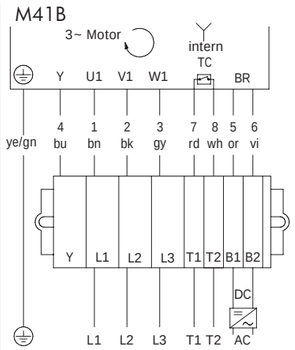

Fig.: With brake, 3-phase, winding for 1 voltage, star connection

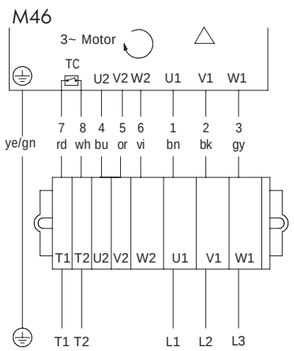

Fig.: 3-phase, 7+2 core cable, 2 speeds, delta connection

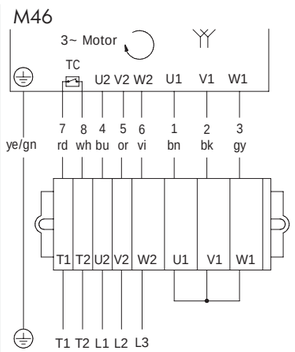

Fig.: 3-phase, 7+2 core cable, 2 speeds, double-star connection

© 2017 **INTERROLL**

Cable connections 1-phase asynchronous motor

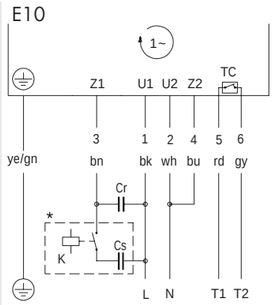

Fig.: 1-phase, 7-core cable

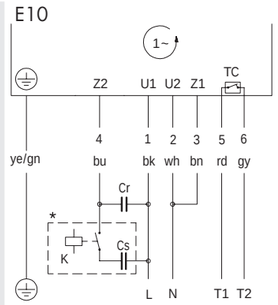

Fig.: 1-phase, 7-core cable

Terminal box 1-phase asynchronous motor

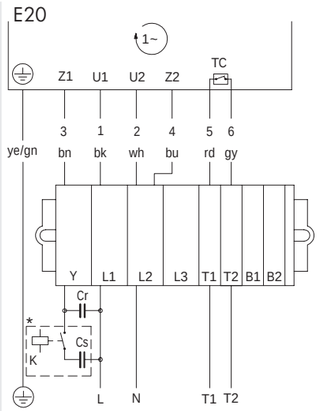

Fig.: 1-phase, 7-core cable

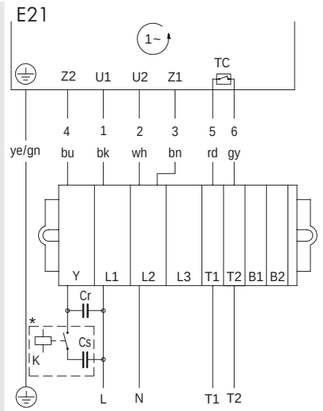

Fig.: 1-phase, 7-core cable

For more information about the starting relay, see page 109.

© 2017 **INTERROLL**

Cable overview

To reduce EMC emissions, please use a shielded cable for operating the motor via a frequency inverter .

Article number	**1107481**	**1107478**	**1107477**	**1107479**	**1107480**	**1107482**	**1000569**
Main cores (number)	7	7	7	7	4	4	7
Cross section	0.5 mm^2	0.75 mm^2	0.75 mm^2	0.75 mm^2	0.75 mm^2	0.75 mm^2	0.75 mm^2
Numeric code and color code	Numeric code + color code	Numeric code + color code	Numeric code + color code	Numeric code + color code	Numeric code + color code	Numeric code + color code	Numeric code + color code
Insulation conductors (main cores)	ETFE	ETFE	ETFE	PP	ETFE	PP	PVC
Data cores (number)	2	2	2	2	2	2	–
Cross section	0.5 mm^2	0.5 mm^2	0.5 mm^2	0.5 mm^2	0.5 mm^2	0.5 mm^2	–
Numeric code and color code	color code	color code	color code	color code	color code	color code	–
Insulation conductors (data cores)	ETFE	ETFE	ETFE	PP	ETFE	PP	–
Insulation of outer sheath	PVC	PVC	PVC	TPU	PVC	TPU	PVC
Halogen-free	No	No	No	Yes	No	Yes	No
Color of outer sheath	Gray	Gray	Gray	Gray	Gray	Gray	Black
Shielded	Copper-tinned	Copper-tinned	–	Copper-tinned	Copper-tinned	Copper-tinned	–
Outside diameter	7.7 ± 0.2 mm	8.4 ± 0.2 mm	7.3 ± 0.2 mm	8.4 ± 0.2 mm	7.6 ± 0.2 mm	7.6 ± 0.2 mm	7.15 ± 0.2 mm
Operating voltage	600 V	600 V	600 V	600 V	600 V	600 V	300/500 V
Temperature range	-30 to +105 °C according to UL	-30 to +105 °C according to UL	-30 to +105 °C according to UL	-30 to +105 °C	-30 to +105 °C according to UL	-30 to +105 °C	-30 to +105 °C -40 to +80 °C according to UL
Approval	cULus	cULus	cULus	None	cULus	None	cULus

© 2017 INTERROLL
© 2017 INTERROLL

Hygienic and loadable
A lagging provides an advantage for drum motors, particularly for wet applications and in food processing, with its typical hygienic requirements. A lagging increases the friction between drum motor and conveyor belt, thereby preventing slippage. On top of that, it is resistant to external influences such as oil, fuels, and other chemicals that may be used for cleaning. Depending on the application, different profiles are available: For high volumes of liquid, a longitudinal grooved lagging redirects moisture between belt and motor, a center V-groove ensures precise belt tracking. Laggings are available in cold and hot vulcanization, whereby the latter meets particularly strict hygiene requirements.

Note: It is important to incorporate a calculation of belt pull and speed that is adjusted to the greater outer diameter of the drum motor.

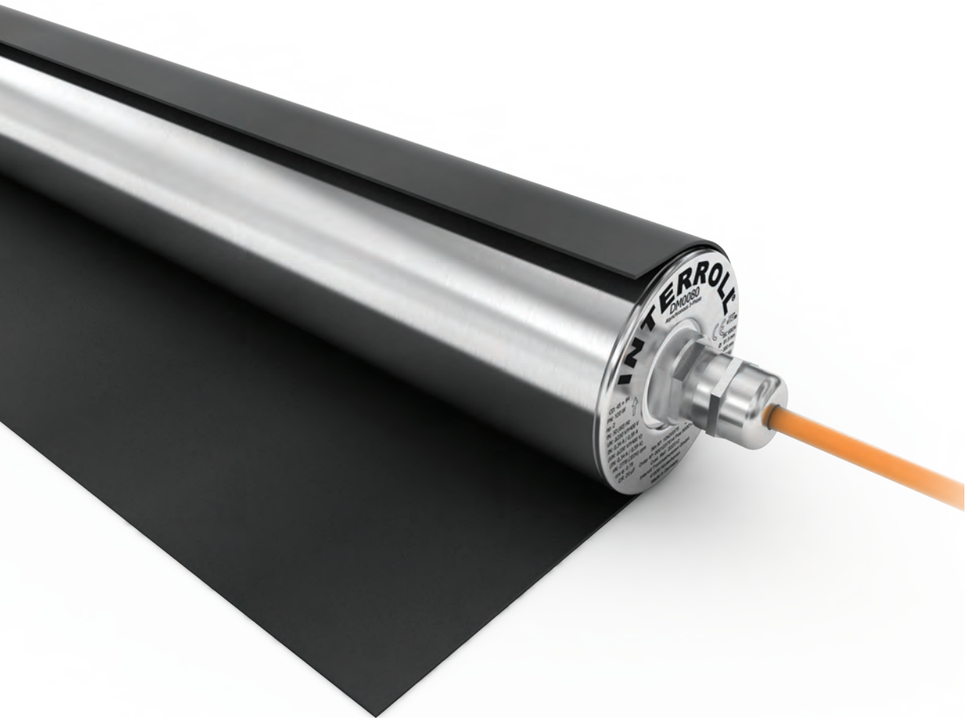

© 2017 INTERROLL

OPTIONS
Lagging
For friction drive belt applications

Technical data

Material	Hot or cold vulcanized NBR Other materials on request
Temperature range	-40 to 248 °F
Shore hardness	65 and 70 ± 5 Shore A

Versions

Cold vulcanization

Lagging profile	Color	Features	Shore hardness	Thickness [mm]
Smooth	Black	Oil- and grease-resistant	65 ± 5 Shore A	3; 4
	White	FDA food approved	70 ± 5 Shore A	
Longitudinal grooves	White	FDA food approved	70 ± 5 Shore A	8
Diamond patterned	Black	Oil- and grease-resistant	70 ± 5 Shore A	8

Hot vulcanization

Lagging profile	Color	Features	Shore hardness	Thickness [mm]
Smooth	Black	Oil- and grease-resistant	65 ± 5 Shore A	2; 3; 4; 5; 6; 8; 10; 12; 14; 16
	White/blue	FDA food approved EC1935/2004 approved	70 ± 5 Shore A	
Longitudinal grooves	Black	Oil- and grease-resistant	65 ± 5 Shore A	6; 8; 10; 12; 14; 16
	White/blue	FDA food approved EC1935/2004 approved	70 ± 5 Shore A	
Diamond patterned	Black	Oil- and grease-resistant	65 ± 5 Shore A	6; 8; 10; 12; 14; 16
	White/blue	FDA food approved EC1935/2004 approved	70 ± 5 Shore A	
V-groove	Black	Oil- and grease-resistant	65 ± 5 Shore A	6; 8; 10; 12; 14; 16
	White/blue	FDA food approved EC1935/2004 approved	70 ± 5 Shore A	

© 2017 INTERROLL

Dimensions

Smooth

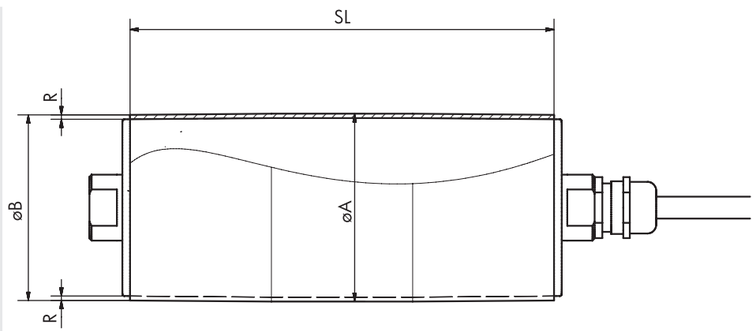

The standard cambers of the lagging are available in the following table.

Drum motor	Ø Shell [mm]	Cold vulcanization			Hot vulcanization		
		Min./max. R [mm]	Ø A [mm]	Ø B [mm]	Min./max. R [mm]	Ø A [mm]	Ø B [mm]
DM 0080	81.5	3	87.5	86.5	2	85.5	84.5
		4	89.5	86.5	16	113.5	112.5

Longitudinal

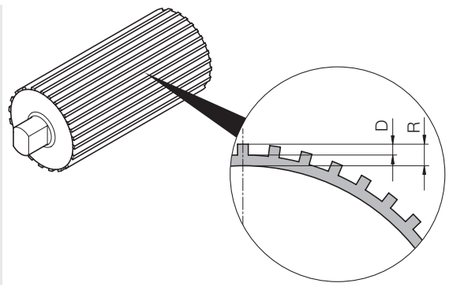

D [mm]	R, cold vulcanization [mm]	R, hot vulcanization [mm]
4	8	6, 8, 10, 12, 14, 16

© 2017 INTERROLL

Diamond patterned

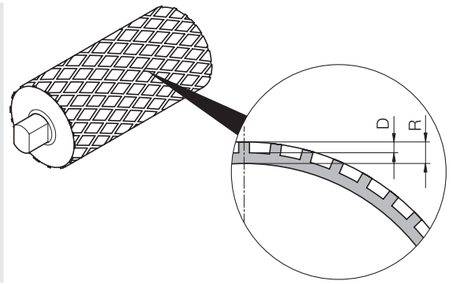

D [mm]	R, cold vulcanization [mm]	R, hot vulcanization [mm]
4	8	6, 8, 10, 12, 14, 16

V-groove hot vulcanization

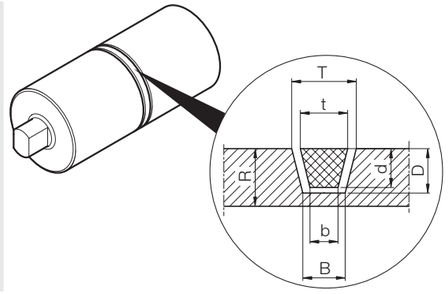

Groove	R Standard [mm]	R Option [mm]	Groove			Belt		
			T [mm]	B [mm]	D [mm]	t [mm]	b [mm]	d [mm]
K6	8	6	10	8	5	6	4	4
K8	8	6	12	8	6	8	5	5
K10	10	8	14	10	7	10	6	6
K13	12	10	17	11	9	13	7.5	8
K15	12	10	19	13	9	15	9.5	8
K17	14	12	21	13	12	17	9.5	11

© 2017 INTERROLL

Hygienic, quiet and long lifespan
Based on the specifications of the specific belt manufacturer, up to 38 teeth mesh with the profile of the most common modular plastic belts. The lagging made of hot-vulcanized NBR is suitable for applications in food processing with high hygienic requirements: Easy to clean and extremely resistant to oil, grease and chemicals. Furthermore, it ensures smooth running and provides a long lifespan of the belt due to its low abrasion.

Note: It is important to incorporate a calculation of belt pull and speed that is adjusted to the greater outer diameter of the drum motor. Please refer to the velocity factor (VF) in the table page 44.

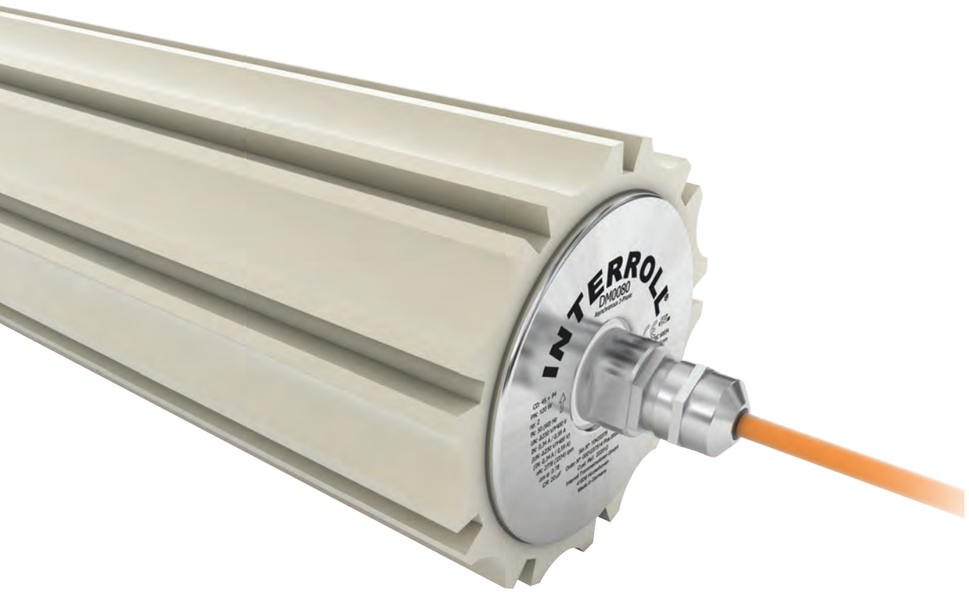

© 2017 **INTERROLL**

OPTIONS
Lagging
For modular plastic belt applications

Technical data

Material	Hot vulcanized NBR
Temperature range	-40 to 248 °F
Shore hardness	70 ± 5 Shore A
Colors	White/blue
Approvals	FDA / EC 1935/2004

Versions

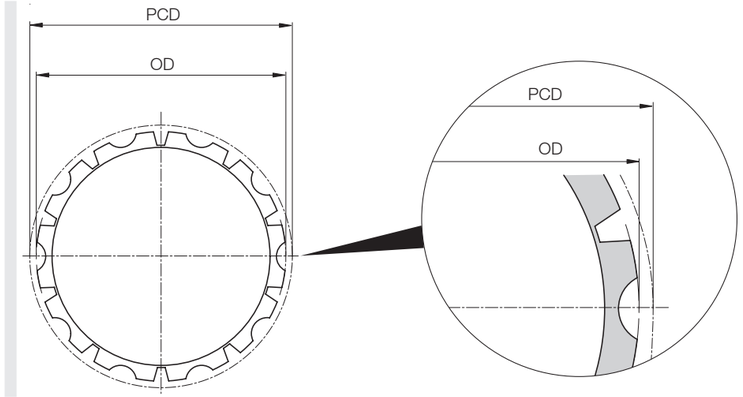

OD = Outer diameter in mm

PCD = Pitch circle diameter in mm

© 2017 **INTERROLL**

Belt manufacturer	Series	Lagging			
		Z	OD [mm]	PCD [mm]	VF
Ammeraal Beltech/Uni-Chains	HDS60500	24	98.5	97.3	1.21
	HDS61000	12	99.0	98.1	1.22
	HDS62000	7	110.8	114.1	1.42
	CNB	12	98.0	98.5	1.22
	MPB	7	105.5	117.1	1.45
	S-MPB	13	105.8	105.8	1.31
Habasit	M1200 PE/AC	24	92.5	97.3	1.21
	M1200 PP	24	96.0	101.0	1.25
	M2500	12	99.4	99.0	1.23
Intralox	800	7	105.5	116.5	1.45
	1600	13	105.8	105.8	1.31
	1650	13	104.9	105.8	1.31
	1100 FG PE/AC	20	91.0	98.9	1.23
	1100 FG PP	20	91.5	99.5	1.24
	1100 FT PE/AC	20	93.5	97.3	1.21
	1100 FT PP	20	94.0	98.3	1.22
Rexnord	1010	12	97.5	98.1	1.22
Scanbelt	S.25-100 & 600	12	92.2	98.7	1.23
	S.25-800	12	93.6	96.8	1.20
Forbo-Siegling	LM14 Series 4	21	93.0	95.3	1.18
	LM14 Series 2	13	107.0	107.0	1.33
	LM50 Series 6	7	107.5	116.3	1.44

Z = Number of teeth
OD = Outer diameter in mm
PCD = Pitch circle diameter in mm
VF = Velocity factor

If your preferred belt type or manufacturer is not listed here, please contact Interroll.

© 2017 INTERROLL

OPTIONS
Lagging
For modular plastic belt applications

© 2017 INTERROLL

Hygienic and quiet
The lagging made of Interroll Premium Hygienic PU is suitable for applications in food processing with high hygienic requirements: Easy to clean and extremely resistant to oil, grease and chemicals. Furthermore, it ensures smooth running and provides a long lifespan of the belt due to its low abrasion. This lagging is available for the most common positive drive solid homogeneous belts as well as for motors in applications with positive drive belts.

Note: It is important to incorporate a calculation of belt pull and speed that is adjusted to the greater outer diameter of the drum motor. Please refer to the velocity factor (VF) in the table page 47.

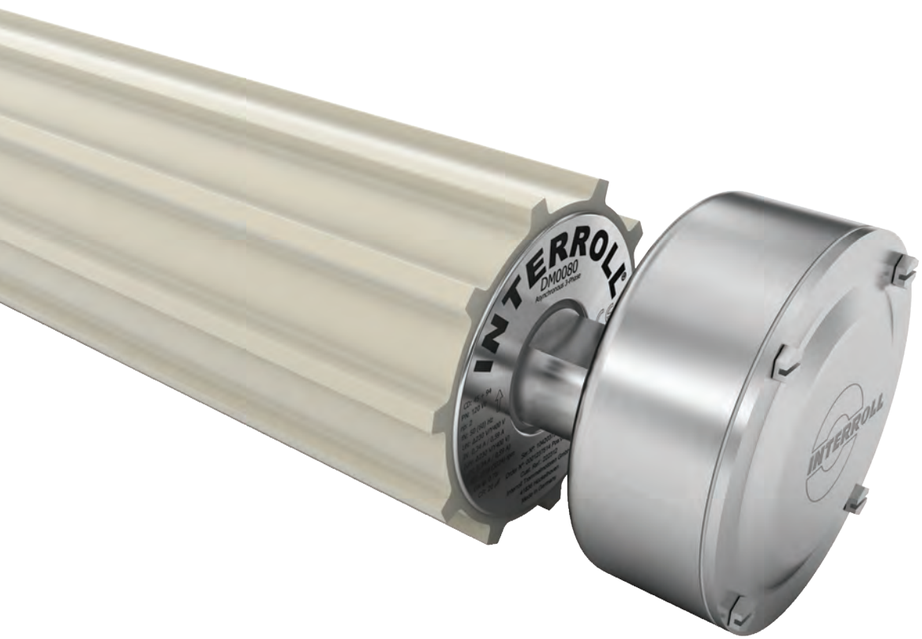

© 2017 INTERROLL

OPTIONS
Lagging
For positive drive solid homogeneous belts

Technical data

Material	Interroll Premium Hygienic PU
Temperature range	-40 to 176 °F
Shore hardness	82 ± 5 Shore D

Versions

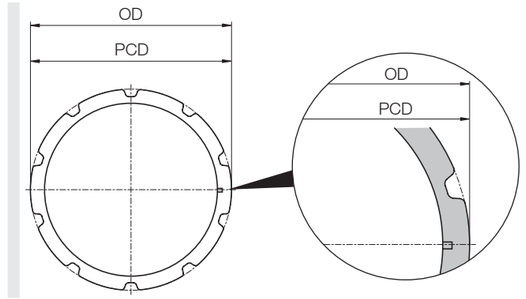

Z = Number of teeth
OD = Outer diameter in mm
PCD = Pitch circle diameter in mm
VF = Velocity factor

Belt manufacturer	Series	Lagging			
		Z	OD [mm]	PCD [mm]	VF
Intralox	ThermoDrive 8026	13	104.4	OD + BT	1.32
Volta	SuperDrive FHB/FHW-3-SD	9	113.4	OD + BT	1.43

Note: Lace versions cannot be driven with our PU laggings.

If your preferred belt type or manufacturer is not listed here, please contact Interroll.

© 2017 INTERROLL

Precise and wear resistant
Stainless steel sprockets are suitable for driving most common modular plastic belts. They are available for motors in applications with positive drive belts or no belt as well as for drum motors with cylindrical shell and key. The hygienic material is naturally qualified for applications in food processing. The sprockets are cut with the help of lasers and are perfectly fit to size.

Note: It is important to incorporate a calculation of belt pull and speed that is adjusted to the greater outer diameter of the drum motor. Please refer to the velocity factor (VF) in the table page 50. Fixed sprockets are available on request. Only one fixed sprocket per drum motor should be fitted to allow for belt expansion.

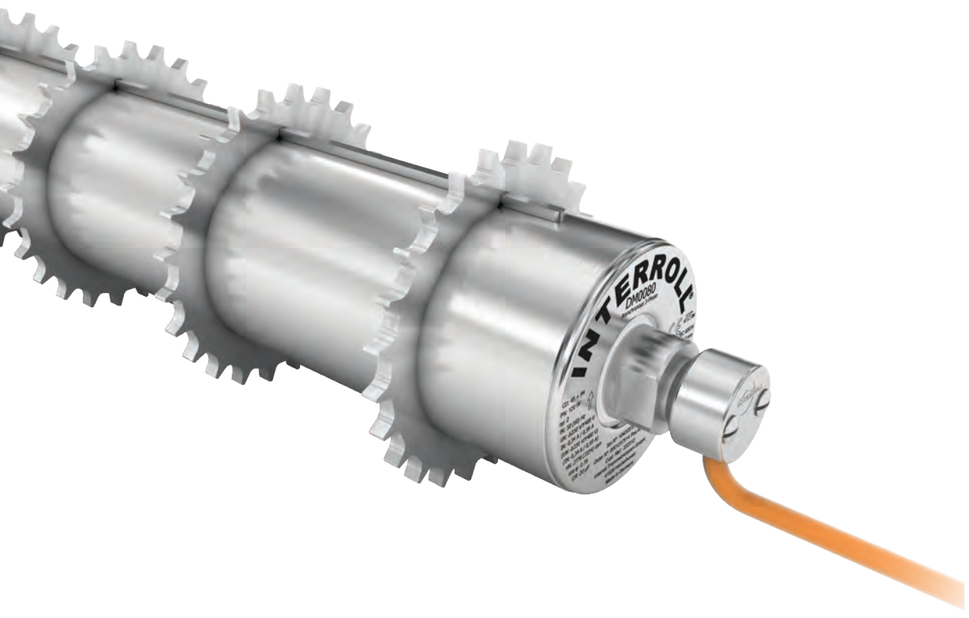

© 2017 **INTERROLL**

OPTIONS
Sprockets
For modular plastic belt applications

Technical data

Material	Stainless steel

Versions

To use sprockets, drum motors have to be ordered with cylindrical shell and key.

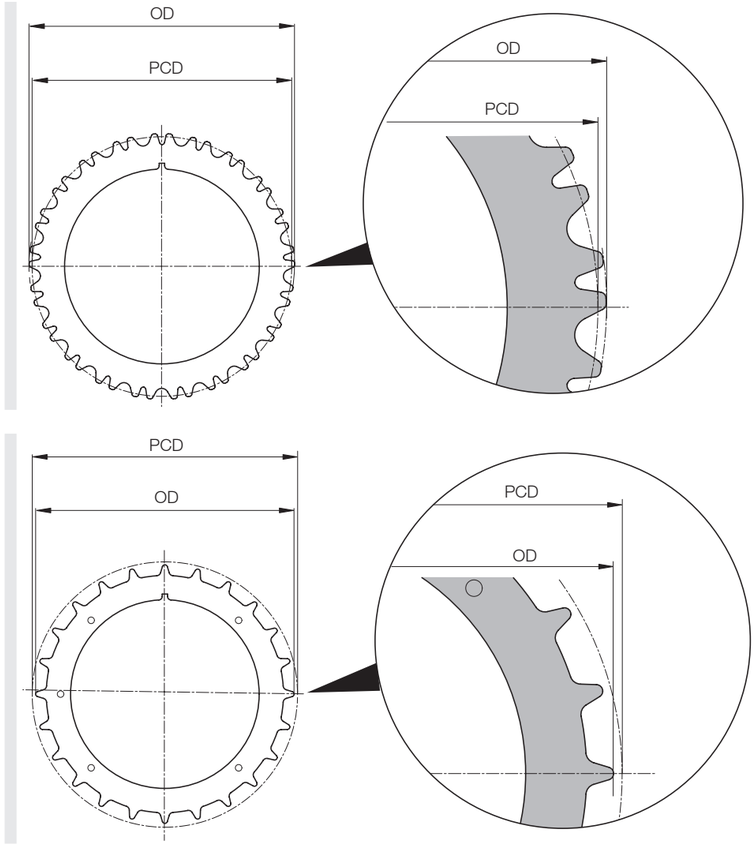

OD = Outer diameter in mm

PCD = Pitch circle diameter in mm

© 2017 **INTERROLL**

Belt manufacturer	Series	Rev.	Sprocket				
			Z	OD [mm]	PCD [mm]	VF	B [mm]
Intralox	800	●	8	124.2	132.0	1.64	6
	900	●	12	107.0	105.0	1.30	3
	1000	●	22	112.0	107.0	1.33	4
	1100	●	24	118.5	116.0	1.44	18
			24	118.5	116.0	1.44	6
	1400	●					
	1500	●	28	118.8	113.0	1.40	6
	1600	●	14	111.8	114.0	1.42	8
	2400	●	14	114.2	113.8	1.41	12
			14	114.2	113.8	1.41	6
Habasit	M11XX	●	26	111.9	107.1	1.33	8
	M12XX	●	25	103.7	101.0	1.25	3
	M25XX	●	15	123.9	122.7	1.52	12
			15	123.9	122.7	1.52	12
Rexnord	1010	–	16	131.5	130.0	1.61	8
Scanbelt	S.12-400	●	28	117.9	112.0	1.39	4
	S.25-100	–	14	113.1	112.0	1.39	4
	S.25-400	●	13	105.0	104.0	1.29	4
Forbo-Siegling	CM 25	●	13	108.1	110.0	1.37	3
Ammeraal Beltech/Uni-Chains	SNB	●	13	107.8	106.0	1.32	3
	Light	●	17	105.0	104.0	1.29	4
	Light EP	●	9	110.6	111.0	1.38	8
	M-SNB & M-QNB	●	24	99.5	97.0	1.20	5
	QNB	●	15	121.50	122.0	1.52	6
	SNB M2	●	14	119.2	114.0	1.42	3

Z = Number of teeth
OD = Outer diameter in mm
PCD = Pitch diameter in mm
VF = Velocity factor
B = Sprocket width in mm
Rev. = Reversible sprocket

© 2017 INTERROLL

Backstops

Backstops prevent a run-back of the belt and load when the power supply is off. Since such a stop is installed directly at the rotor shaft and operates mechanically, no electrical connection is required: The bearing runs only in one direction. This principle achieves a higher holding torque than does an electromagnetic brake.

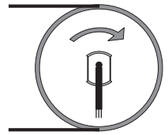

Note: Backstops are available only for asynchronous drum motors.

Rotational direction looking from the connector side: Available for clockwise (standard) or counterclockwise direction.

Balancing

In principle, static or dynamic balancing can be applied - depending on requirement or motor type. The goal in each case is to reduce vibrations and out-of-balance running for sensitive high speed or dynamic weighing applications. Static balancing is applied to the drum motor shell only; therefore the result must be tested for each application. Dynamic balancing, on the other hand, includes the drum motor rotor, shell and end housings, thus meeting a balancing grade of G2.5.

Any external modification, such as fixtures, laggings or sprockets, has an impact on the imbalance.

Technical data for dynamic balancing

End housing	Stainless steel
Rubber lagging material	Only hot vulcanized NBR and PU may be used
Max. balancing length	FW ≤ 800 mm

© 2017 INTERROLL

Electromagnetic brakes

To safely hold loads on reversible inclined and declined conveyors, electromagnetic brakes are used. They operate via rectifiers. The braking force is applied directly to the rotor shaft of the drum motor. When power to the motor is disrupted, the brake will close automatically. Special advantage: Electromagnetic brakes are quiet and operate with low wear.

Note: Electromagnetic brakes are available only for asynchronous drum motors.

Technical data

Drum motor	Rated torque M [Nm]	Rated power [W]	Rated voltage [V DC]	Rated current [A]	DC switching t1 [ms]	AC switching t1 [ms]	Opening delay time t2 [ms]
DM 0080	0.7	12	24	0.5	13	80	20
	0.7	12	104	0.12	13	80	20

Response time

The brake opening and closing response time can vary substantially depending on the following:

- Oil type and viscosity
- Oil quantity in the drum motor
- Ambient temperature
- Internal operating temperature of the motor
- Switching at input (AC switching) or at output (DC switching)

The difference between AC switching and DC switching is shown in the following table:

	AC switching	DC switching
Closing response time	Slow	Fast
Brake voltage	approx. 1 V	approx. 500 V

Note: For DC switching, the switching contacts must be protected against damage from high voltage.

© 2017 INTERROLL

OPTIONS
Electromagnetic brakes

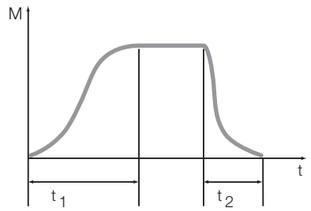

Fig.: Closing and opening response time

t_1 = Closing response time
t_2 = Opening response time

Reduction of braking torque

The rated braking torque is heavily influenced by the operating conditions inside the drum motor (operation in oil at high temperatures) and the ambient temperature. To calculate the holding torque limit on the drum shell, you need to multiply the rated torque of the brake by the gear ratio of the drum motor. For safety reasons, the calculated brake torque has to be at least 25 % higher than the needed load torque.

© 2017 INTERROLL

Rectifiers

Electromagnetic brakes on drum motors are operated via rectifiers. Different versions are available depending on the applications: Half-wave and bridge rectifiers for standard applications as well as fast acting and multiswitch rectifiers for applications in which short opening delay times are necessary.

Note: Rectifiers, just like electromagnetic brakes, are available only for asynchronous drum motors.

Every rectifier is an external component that must be covered or installed in a control box as close to the brake as possible.

Technical data

Input voltage [V AC]	Brake voltage [V DC]	Starting voltage [V DC]	Holding voltage [V DC]	Version	Application	Article number
115	104	104	52	Fast-acting rectifier	A or B	61 011 343
230	207	207	104	Fast-acting rectifier	A or B	61 011 343
230	104	104	104	Half wave/bridge rectifier	A or B	1 001 440
230	104	190	52	Phase rectifier	A	1 001 442
400	104	180	104	Multiswitch rectifier	A	1 003 326
460	104	180	104	Multiswitch rectifier	A	1 003 326
460	207	207	207	Half wave/bridge rectifier	A or B	1 001 441

A = Continuous operation
B = Frequent starts/stops

Using a fast acting rectifier or a phase rectifier will save energy because the holding voltage is lower than the starting voltage.

Shielded cables should be used to protect against EMC.

© 2017 INTERROLL

Dimensions

Half wave/bridge rectifier

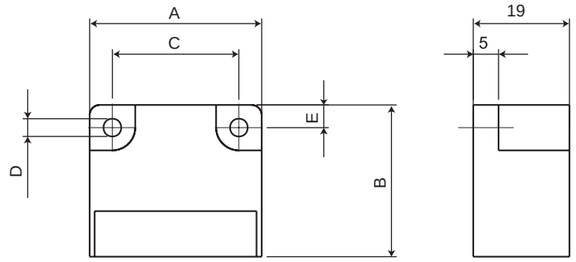

Article number	A [mm]	B [mm]	C [mm]	D [mm]	E [mm]
1001440	34	30	25	3.5	4.5
1001441	64	30	54	4.5	5

Phase rectifier

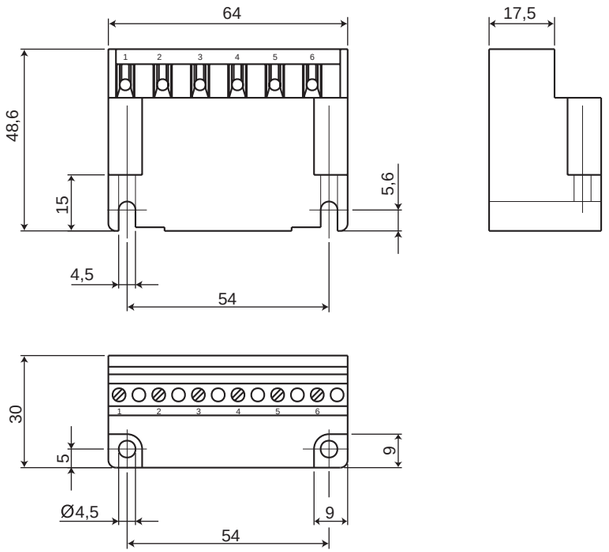

© 2017 INTERROLL

Fast-acting rectifier

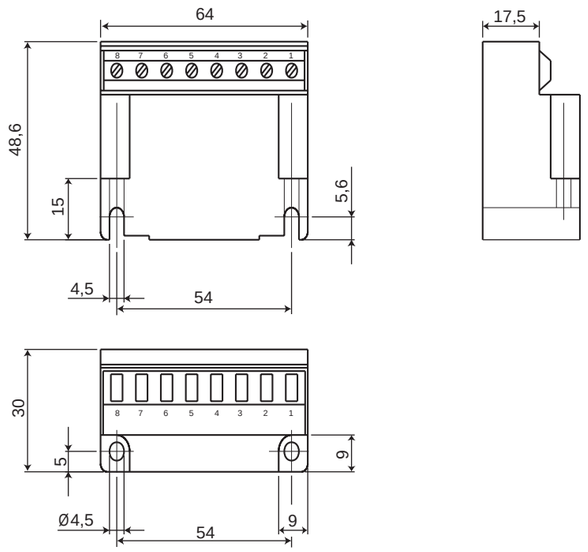

Multiswitch rectifier

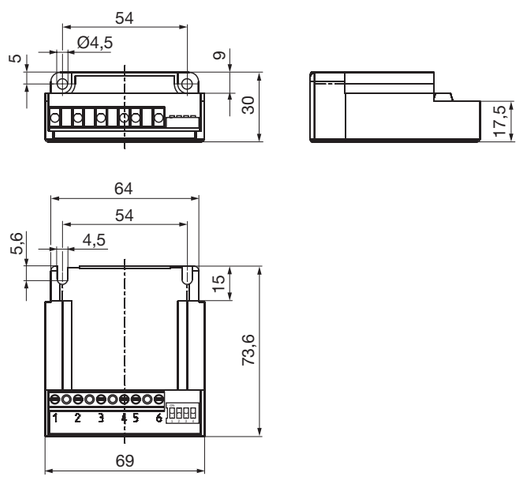

© 2017 INTERROLL

Connection diagram

Interroll recommends installing a switch between (3) and (4) for fast brake release.

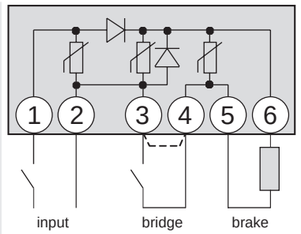

Fig.: Half-wave rectifier

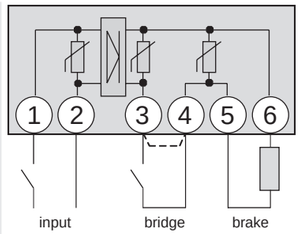

Fig.: Bridge rectifier

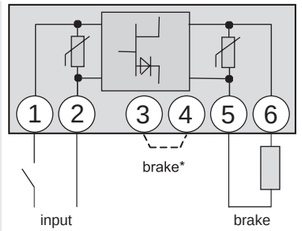

Fig.: Phase rectifier

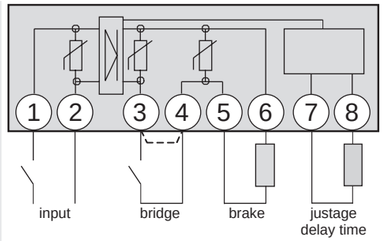

Fig.: Fast-acting rectifier

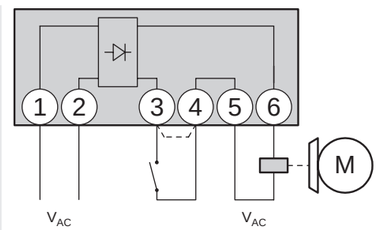

Fig.: Multiswitch rectifier

© 2017 INTERROLL

Feedback devices

If speed, direction and position of the belt or load are to be permanently monitored and controlled, the use of an encoder is recommended. It enables a system control with closed control loop by transmitting low- to high-resolution signals to an external control unit. An encoder is installed onto the rotor shaft or embedded in the rotor bearing and cannot be used simultaneously with a brake or a backstop. Incremental and absolute value encoders are available as encoder types.

All resolutions and speeds provided in the following table refer to the rotor shaft. The drum motor gear ratio must be considered to find the values related to the drum shell.

Encoder types		Asynchronous drum motors	Synchronous drum motors
SKF 32 incremental encoder	32 pulses	●	
RLS incremental encoder	64 to 1024 pulses	●	●
LTN resolver	2-pole resolver	●	●

Technical data

SKF 32 incremental encoder

Power supply	V_{dd} = 5 – 24 V
Current consumption	Max. 20 mA
Electrical interface	Open collector NPN
Output increments	A, B
Increments resolution	32 pulses/revolution
Max. cable length	10 m

Note: Interroll recommends the use of an optocoupler for the following reasons:

- To protect the encoder
- To enable connection to other levels such as PNP
- To get the maximum potential between high and low signal

© 2017 INTERROLL

OPTIONS
Feedback devices

RLS incremental encoder

Power supply	V_{dd} = 5 V ± 5 %
Current consumption	35 mA
Electrical interface	RS422
Output increments	A, B, Z, /A, /B, /Z
Increments resolution	64; 512; 1024 pulses/revolution 2048 pulses/revolution (max. rotor speed 2500 1/min)
Max. cable length	5 m

LTN resolver

Power supply	7 V
Input frequency range	5 kHz / 10 kHz
Input current	58 mA / 36 mA
Number of poles	2
Transformation ratio	0.5 ± 10 %
Max. cable length	10 m

© 2017 INTERROLL

Connection diagrams

Abbreviations

ye/gn	= yellow/green	pk	= pink
wh	= white	rd	= red
bn	= brown	bu	= blue
gn	= green	TC	= Thermal controller (WSK)
ye	= yellow	BR	= Electromagnetic brakes
()	= other color	NC	= Not connected
gy	= gray		

SKF 32 incremental encoder

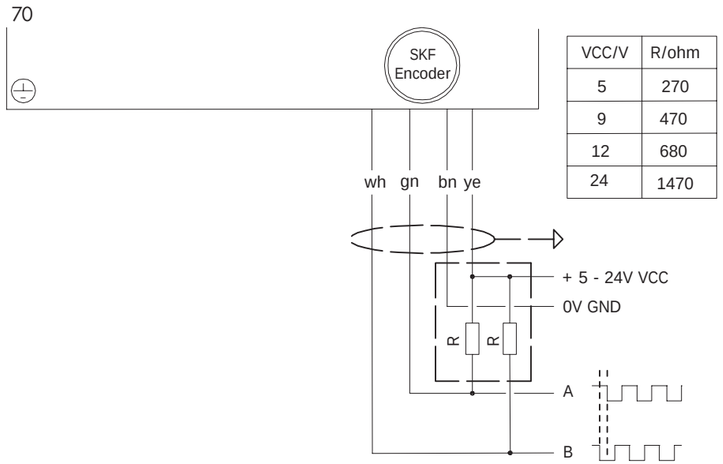

VCC/V	R/ohm
5	270
9	470
12	680
24	1470

RLS incremental encoder

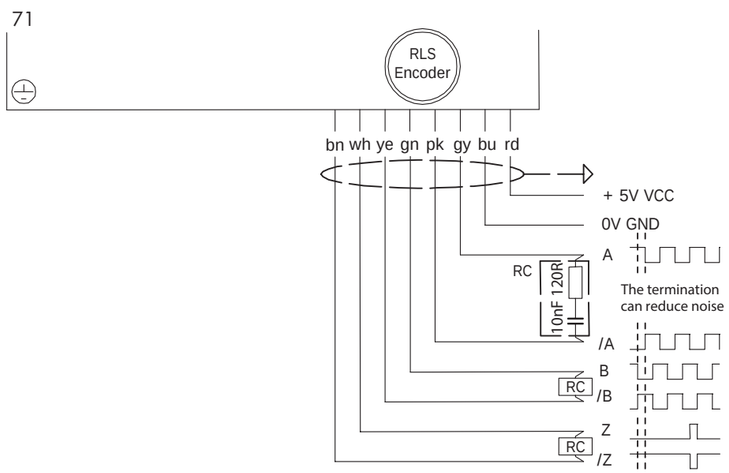

© 2017 INTERROLL

LTN resolver

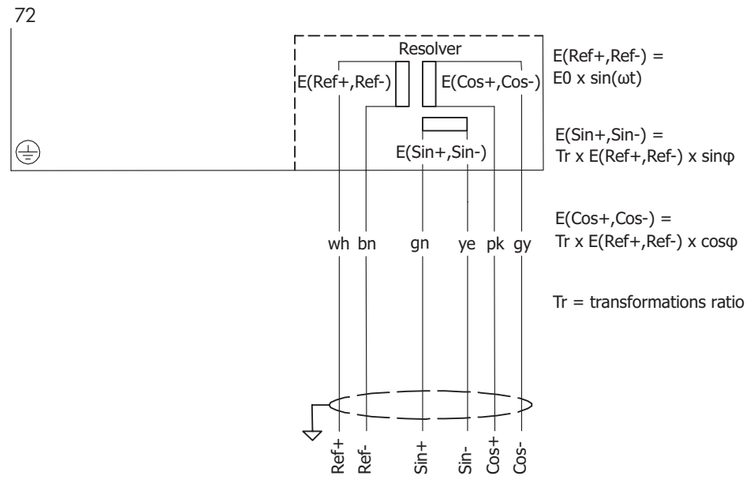

Cable

	Cable for incremental encoder SKF 32	Cable for incremental encoder RLS	Cable for resolver LTN
Main cores (number)	4	8	6
Cross section	0.14 mm²	0.14 mm²	0.14 mm²
Numeric code and color code	color code	color code	color code
Insulation conductors (main cores)	PVC	PVC	PVC
Insulation conductors (data cores)	PVC	PVC	PVC
Halogen-free	No	Yes	No
Color of outer sheath	Gray	Gray	Gray
Shielded	Copper	Copper	Copper
Outside diameter	4.3 ± 0.3 mm	5.0 ± 0.2 mm	5.8 ± 0.3 mm
Operating voltage max.	250 V	524 V	350 V
Temperature range	-20 to +105 °C according to UL	-20 to +105 °C according to UL	-20 to +80 °C according to UL

© 2017 INTERROLL

Mounting brackets

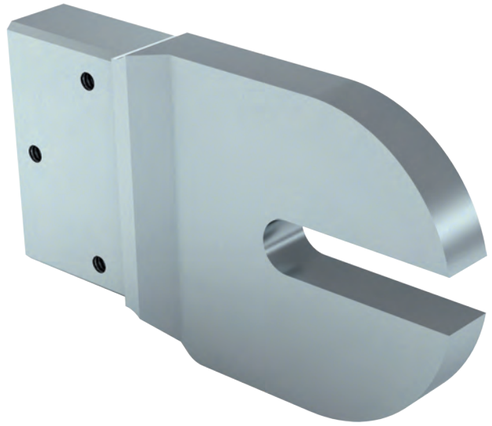

In order to securely fasten Interroll Drum Motors, the corresponding idler pulleys or motors with cable connectors or terminal boxes, suitable brackets made of stainless steel, aluminum and PE are available. It is important that the drum motors feature a continuous threaded hole in the front shaft and idler pulleys a corresponding drilled hole in both shaft ends.

For the dimensions of shafts with threaded holes, refer to the dimensional drawings for the corresponding drum motor.

Product selection

Drum motor	Idler pulley	Bracket set	Material	Electrical connector	Article number		
					WAF 13.5 mm	WAF 20 mm	WAF 25 mm
DM 0080		A + B	Aluminum	Elbow connector Straight connector	61008694	61113879	61113880
	DM 0080	B + C	Aluminum		61008696	61113885	61113886
DM 0080		A + B	PE	Elbow connector Straight connector	61008693	61113889	61113890
	DM 0080	B + C	PE		61008695	61113895	61113896
DM 0080		A + B	VA	Elbow connector Straight connector	61113943	61113944	61113945
	DM 0080	B + C	VA		61113946	61113947	61113948

WAF = Width across flats

© 2017 INTERROLL

ACCESSORIES
Mounting brackets
For drum motors and idler pulleys

Mounting overview

Brackets must be mounted in the following way:

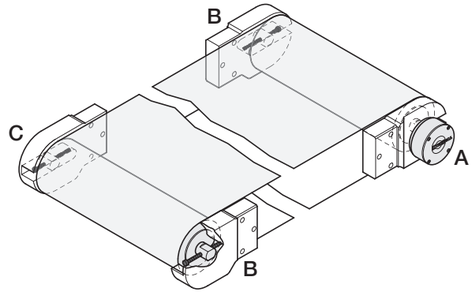

Dimensions

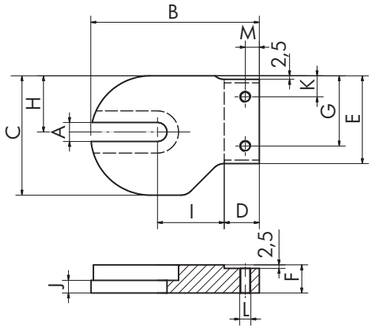

Fig.: Right bracket (A) aluminum or VA

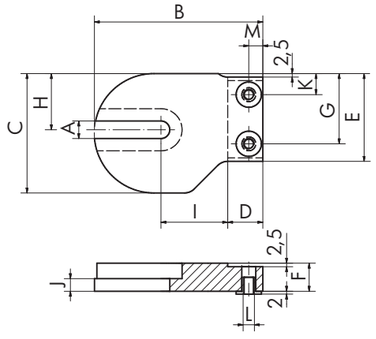

Fig.: Right bracket (A) PE

Drum motor/deflection roller	A [mm]	B [mm]	C [mm]	D [mm]	E [mm]	F [mm]	G [mm]	H [mm]	I [mm]	J [mm]	K [mm]	L	M [mm]
DM 0080	13.5	120	85	25	62.5	20	50	40	47.5	9	15	M8	10
	20	120	85	25	62.5	20	50	40	47.5	9	15	M8	10
	25	120	85	25	62.5	20	50	40	47.5	9	15	M8	10

© 2017 INTERROLL

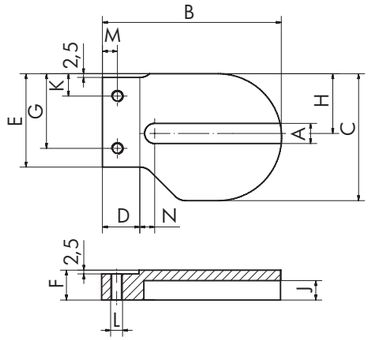

Fig.: Left bracket (B) aluminum or VA

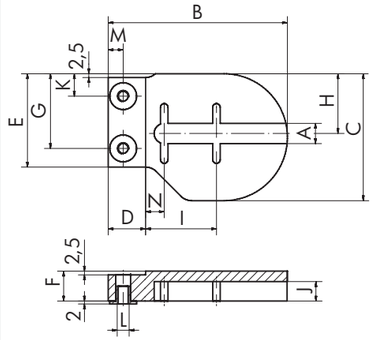

Fig.: Left bracket (B) PE

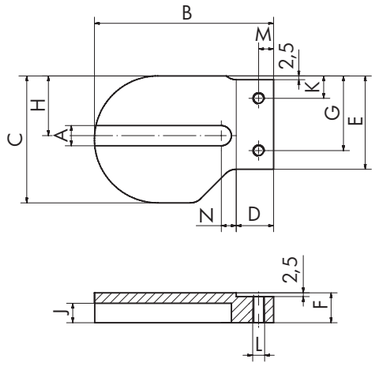

Fig.: Right bracket (C) aluminum or VA

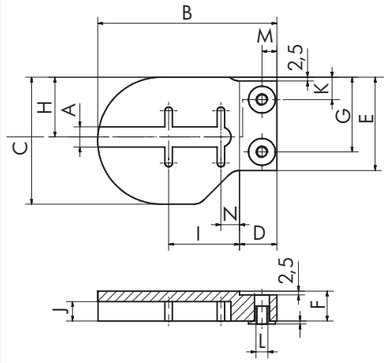

Fig.: Right bracket (C) PE

Drum motor/idler pulley	Material	A [mm]	B [mm]	C [mm]	D [mm]	E [mm]	F [mm]	G [mm]	H [mm]	I [mm]	J [mm]	K [mm]	L	M [mm]	N [mm]
DM 0080	Aluminum	13.5	120	85	25	62.5	20	50	40	–	13	15	M8	10	10
		20	120	85	25	62.5	20	50	40	–	13	15	M8	10	10
		25	120	85	25	62.5	20	50	40	–	13	15	M8	10	10
	PE	13.5	120	85	25	62.5	20	50	40	42.5	13	15	M8	10	12.5
		20	120	85	25	62.5	20	50	40	42.5	13	15	M8	10	12.5
		25	120	85	25	62.5	20	50	40	42.5	13	15	M8	10	12.5
	VA	13.5	120	85	25	62.5	20	50	40	–	13	15	M8	10	10
		20	120	85	25	62.5	20	50	40	–	13	15	M8	10	10
		25	120	85	25	62.5	20	50	40	–	13	15	M8	10	10

© 2017 INTERROLL
© 2017 INTERROLL

Plummer Block

The plummer block bracket supports a simple assembly of the drum motors and idler pulleys.

Product selection

Drum motor	Material	Article number		
		WAF 13.5 mm	WAF 20 mm	WAF 25
DM 0080	Aluminum	61008580	61113900	61010381
DM 0080	VA	61113949	61113950	61113951

WAF = Width across flats

© 2017 INTERROLL

ACCESSORIES
Plummer Block
For drum motors and idler pulleys

Dimensions

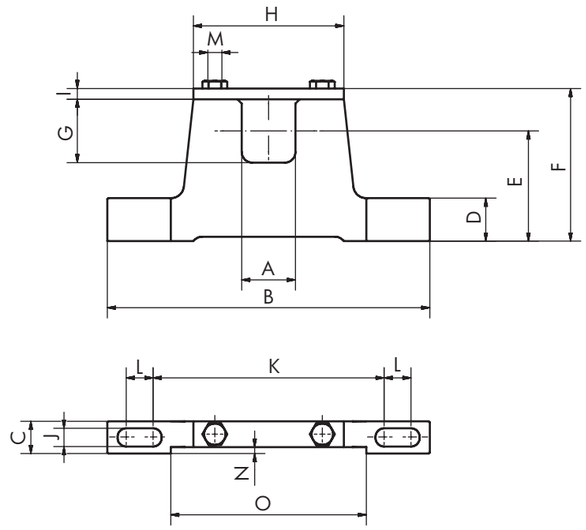

Drum motor/idler pulley	A [mm]	B [mm]	C [mm]	D [mm]	E [mm]	F [mm]	G [mm]	H [mm]	I [mm]	J [mm]	K [mm]	L [mm]	M [mm]	N [mm]	O [mm]
DM 0080	13.5	100	10	12	35	47.5	16.5	35	4	6.5	72.5	7.5	M6	–	–
	20	150	15	20	51	68.5	24.5	70	5	8.5	108	12	M6	3	91
	25	150	15	20	51	71	29.5	70	5	8.5	108	12	M6	3	91

© 2017 INTERROLL

Interroll deflection rollers can be used on the driven side of conveyor belts. The deflection roller with integrated bearings has a fixed shaft and the same dimensions as a drum motor.

© 2017 **INTERROLL**

ACCESSORIES
Idler pulley with integrated bearings

Technical data

Protection rate	IP69k
Max. belt tension	See equivalent drum motor
Max. belt speed	See equivalent drum motor
Shell length	See equivalent drum motor
Internal shaft sealing system	NBR
External shaft sealing system	PTFE

Design versions

For idler pulleys you can choose the following design versions:

Component	Option	Material			
		Aluminum	**Mild steel**	**Stainless steel**	**PTFE**
Shell	Crowned		●	●	
	Cylindrical		●	●	
	Cylindrical + key for sprockets		●	●	
End housing		●		●	
Shaft			●	●	
External seal	PTFE				●

Versions

- Laggings for friction drive belts, page 38
- Laggings for modular plastic belts, page 42
- Laggings for positive drive solid homogeneous belts, page 46
- Sprockets for modular plastic belts (cylindrical shell with key), page 48

© 2017 **INTERROLL**

Dimensions

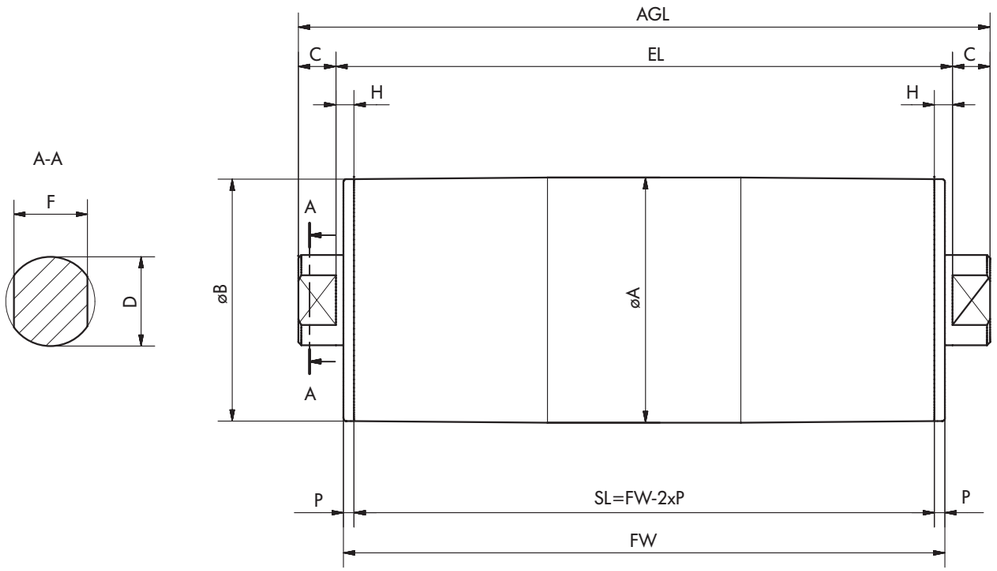

Type	A [mm]	B [mm]	C [mm]	D [mm]	F [mm]	H [mm]	P [mm]	SL [mm]	EL [mm]	AGL [mm]
DM 0080 crowned	81.5	80.5	12.5	30	25	6	3.5	FW - 7	FW + 5	FW + 30
DM 0080 crowned	81.5	80.5	12.5	25*	20	6	3.5	FW - 7	FW + 5	FW + 30
DM 0080 crowned	81.5	80.5	12.5	17*	13.5	6	3.5	FW - 7	FW + 5	FW + 30
DM 0080 cylindrical	81	81	12.5	30	25	6	3.5	FW - 7	FW + 5	FW + 30
DM 0080 cylindrical	81	81	12.5	25*	20	6	3.5	FW - 7	FW + 5	FW + 30
DM 0080 cylindrical	81	81	12.5	17*	13.5	6	3.5	FW - 7	FW + 5	FW + 30

© 2017 INTERROLL
© 2017 INTERROLL

Most of the Interroll Drum Motors are used in unit handling conveyors that are transporting small packages, boxes, cardboard containers, small pallets or other material. Depending on the type of application, friction drive or positive drive belts can be used with asynchronous or with synchronous drum motors.
Examples of applications:

- Logistics, such as postal sorting and distribution centers
- Airport baggage handling
- Seafood, meat and poultry
- Bakeries
- Fruit and vegetables
- Beverage and brewing industry
- Snacks
- Weighing equipment for packages

Friction drive belts

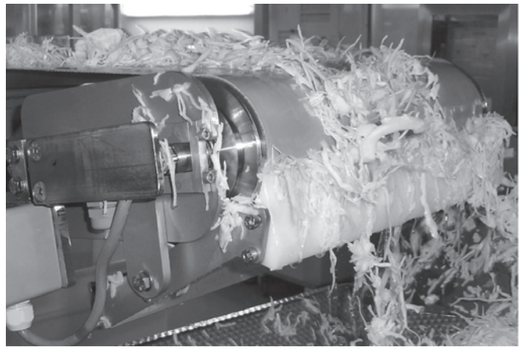

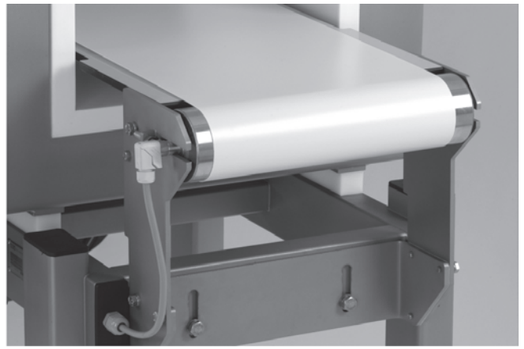

Friction drive belts are driven via the friction between drum motor and conveyor belt. The drum motor is normally crowned to prevent belt wander. The belt must be tensioned in order to transfer the torque from the drum motor. The top surface of the belt can be flat, plain or have a ribbed, grooved or diamond pattern.

© 2017 INTERROLL

Lagging

Interroll offers a broad spectrum of hot and cold-vulcanized laggings made of different materials to increase the friction between belt and drum shell. For more information, page 38.

Positive drive belts

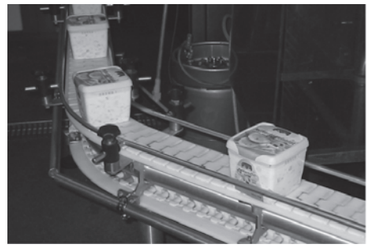

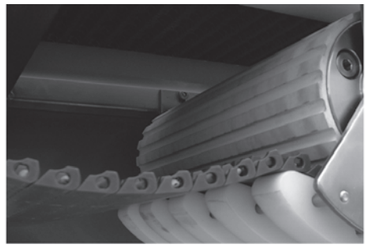

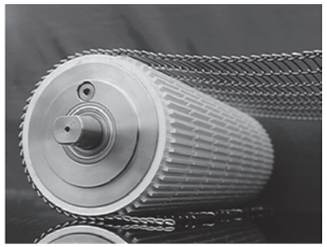

Modular plastic belts, solid homogeneous belts, steel mesh or wire belts are positively driven, i.e., with no belt tension. Since the belt has hardly any direct contact with the drum shell, the heat dissipation is less effective in these applications. For this reason, the drum motor should be used with a frequency inverter that is optimized for this application.

Positive drive belts use less power than friction drive belts, allowing longer conveyors. Because these belts are not tensioned, there is less stress on the bearings and internal parts of the drum motor resulting in a longer service life. A power reduction of 17 % is required for asynchronous motors in these applications.

Interroll recommends the use of profiled lagging wherever possible to ensure easy cleaning, evenly distributed torque transmission and torque dampening at start-up. Stainless steel sprockets can be supplied for belts where profiled lagging is not suitable.

Interroll offers a wide range of profiled lagging according to the belt manufacturers' specifications. For more information, page 46.

© 2017 INTERROLL

Non-belt applications

For applications without a conveyor belt or with a narrow belt covering less than 70 % of the drum motor face width, heat from the motor can no longer be dissipated via the belt contact. For these applications, we recommend using a 2-pole asynchronous drum motor or synchronous drum motor with frequency inverter.

Examples of non-belt applications include the following:
- Pallet roller drive and pallet transfer
- V-belt drive for driving roller conveyors
- Chain conveyors
- Narrow belts covering less than 70 % of the shell width

A power reduction of 17 % is required for asynchronous motors in these applications.

For some non-belt applications the drum motor can be mounted in a non-horizontal position. For more information, page 100.

© 2017 INTERROLL
© 2017 INTERROLL

Hygienic conditions

For food processing and other applications where hygiene is paramount we recommend the following materials, connectors and accessories:

- Stainless steel shell
- Stainless steel cover
- Stainless steel shafts
- External shaft seals made of PTFE
- Food grade synthetic oil
- NBR hot-vulcanized (FDA & EC 1935/2004)
- Molded PU, Shore hardness 82D (FDA & EC 1935/2004 only)
- A lagging of hot vulcanized NBR or molded PU should be combined only with a stainless steel shell.
- Diamond patterned lagging is not suitable for food processing applications.

Cable connectors/terminal boxes and cables

All cable connectors, terminal boxes and cables are not included in our (EC) 1935/2004 and FDA declaration. These components are considered "Not in direct contact with food stuffs" as described in the following regulations: Commission regulation (EC) No. 2023/2006 of December 22, 2006 on good manufacturing practice for materials and articles intended to come into contact with food. Article 3, definition (d): "Non-food-contact side" means the surface of the material or article that is not directly in contact with food.

© 2017 INTERROLL

FDA Food Code 2009: Chapter 1 - Purpose and Definitions - "Food-contact surface" means

- (1) A surface of equipment or a utensil with which food normally comes into contact; or
- (2) A surface of equipment or a utensil from which food may drain, drip, or splash:
  - (a) Into a food, or
  - (b) onto a surface normally in contact with food.

NSF: On request
USDA & 3A: no compliance
For food processing applications, Interroll recommends using cable connectors and terminal boxes in stainless steel or Technopolymer.

Hygienic design

All Interroll Drum Motors are designed in accordance with EU Directives for Hygienic Design:

- Machinery Directive (Directive 98/37/EC) Food Machinery section, Appendix 1, point 2.1 (to be replaced by 2006/42/EC)
- Document 13 EHEDG-Guideline to the hygienic design of apparatus for open processes, prepared in collaboration with 3-A and NSF International

EHEDG-compliant drum motors

Interroll Drum Motors configured with components listed below comply with EHEDG, Class I "Open Equipment". They are ideally suited for ultra-hygienic environments and tolerate high water pressure washing (IP69k):

- Stainless steel shell: cylindrical or crowned
- Stainless steel cover
- Stainless steel shafts
- Shaft seals made of PTFE
- Food grade synthetic oil

Conveyor frame

EHEDG design rules recommend the use of rust-free open conveyor frames to facilitate easy cleaning, wash down and disinfection of the conveyor, drum motor and belt. The drum motor should be mounted in the conveyor frame in such a way that there is no metal-on-metal contact between motor shaft and frame support, .e.g. by using a rubber seal between shaft and frame support. The sealing material shall be FDA and EC 1935/2004 compliant.

Cleaning materials

Cleaning specialist Ecolab has certified a 5-year minimum lifetime of materials used by Interroll when exposed to typical cleaning and disinfecting procedures using Ecolab's Topax range of products: P3-topax 19, P3-topax 686, P3-topax 56 and P3-topactive DES.

© 2017 INTERROLL

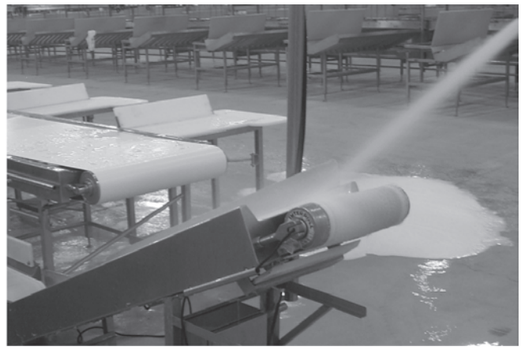

High pressure cleaning

Max. 80 °C / 80 bar for PTFE sealing with IP69k

Note: Changes in ambient temperature and humidity can cause condensation and lead to water inside the terminal box (especially in stainless steel terminal boxes). For example, this can occur when the motor is operated below 5 °C and then cleaned with hot water or steam. Interroll recommends using the cable option in such cases.

High temperatures

Interroll Drum Motors are generally cooled by dissipating heat through the contact between the surface of the drum shell and the conveyor belt. It is essential that each drum motor has an adequate thermal gradient between the internal motor and its ambient operating temperatures.

All drum motors in the catalog are designed and tested in accordance with EN 60034 (without lagging and with a belt) for use at a maximum ambient temperature of +40 °C. Any material can be used, but stainless steel has less heat dissipation.

Laggings can cause thermal overload for positive driven belts. For this reason, use motors with frequency inverters that ensure an optimum temperature. As an alternative, it is also possible to use synchronous motors. Rubber lagging for friction drive belts can also cause thermal overload. External cooling systems can also be used to prevent thermal overload.

If you need a motor for applications with ambient temperatures above +40 °C, please contact Interroll.

© 2017 INTERROLL

Low temperatures

When a drum motor is operated in low temperatures (below +2 °C), consider the viscosity of the oil and temperature of the motor while it is not running. For additional information and notes, please contact Interroll.

Anti-condensation heating for asynchronous drum motors

In ambient temperatures below +1 °C, the motor windings should be heated to regulate the oil viscosity and to keep seals and internal parts at a constant temperature.

If the motor current is switched off for some time and the ambient temperature is very low, then the motor oil becomes viscous. In these conditions problems may occur when starting the motor and at temperatures of around zero frost crystals can form on the sealing surfaces, causing oil leakage. To prevent these problems use anti-condensation heating.

The heater applies a DC voltage to the motor winding. This causes current to flow either in the two motor phases of a 3-phase motor or the main winding of a 1-phase motor. The amperage depends on the voltage applied and the winding resistance. This current creates a power loss in the winding which heats up the motor to a certain temperature. This temperature is determined by the ambient temperature and the amperage.

Information on the correct voltage is available in the motor version tables. The values listed are average values, which can be increased or decreased depending on the required motor temperature and the ambient temperature. Interroll strongly recommends determining the correct voltage by testing under actual operating conditions.

Only DC voltage may be used to heat the motor. The use of AC voltage can cause the motor to move unexpectedly, leading to serious damage or injury.

The stationary heating system should only be used when the motor is actually idle. The heating voltage must be switched off before the motor is operated. This can be ensured by using simple relays or switches.

The suggested voltages are calculated to prevent the formation of condensation. If the motor needs to be held at a specific temperature, then the stationary heating system must be set up accordingly. In this case, please contact your Interroll customer consultant.

The anti-condensation heating voltage must be connected to any two phases of a 3-phase motor. The heating current supplied by the heating system can be calculated as follows:

$$I_{DC} = \frac{U_{SHdelta} \cdot 3}{R_{Motor} \cdot 2}$$

Fig.: Dreieckschaltung

$$I_{DC} = \frac{U_{SHstar}}{R_{Motor} \cdot 2}$$

Fig.: Sternschaltung

© 2017 INTERROLL

Low noise

All Interroll Drum Motors excel with relatively low noise development and vibrations. The performance levels are not specified or guaranteed in this catalog because they can vary depending on the type of motor, number of poles, speed and application. For specific low-noise applications, please contact your Interroll customer consultant.

Altitudes above 1000 m

Operating a drum motor at an altitude of more than 1000 m may result in power loss and thermal overload due to the low atmospheric pressure. This must be considered when calculating your power requirement. For more information, please contact your Interroll customer consultant.

Supply voltage (asynchronous drum motors only)

Using 3-phase 50 Hz motors in a 60 Hz supply system with the same voltage

- Motor rated: 230/400 V – 3 ph – 50 Hz
- Supply voltage: 230/400 V – 3 ph – 60 Hz

Using a 3-phase 50 Hz motor in a 60 Hz supply system will increase the frequency, and therefore the speed, by 20 %. If the other rated motor parameters are to be kept constant, a 20 % higher input voltage is required (U/f law). However, if this 20 % higher voltage is not supplied, all voltage-dependent parameters will be affected in accordance with the following table:

© 2017 INTERROLL

System voltage = rated motor voltage

Motor data			
Power	P	kW	100 %
Rated speed	n_n	1/min	120 %
Rated torque	M_n	Nm	83.3 %
Starting torque	M_A	Nm	64 %
Pull-up torque	M_S	Nm	64 %
Pull-out torque	M_K	Nm	64 %
Rated current	I_N	A	96 %
Starting current	I_A	A	80 %
Power factor	cos φ		106 %
Efficiency	η		99.5 %

Supply voltage	**Motor rating**
230/400 V	230/400 V
3 ph	3 ph
60 Hz	50 Hz

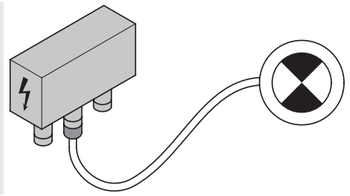

© 2017 INTERROLL

AMBIENT CONDITIONS

Using 3-phase 50 Hz motors in a 60 Hz supply system with 15/20 % higher voltage

- Motor rated: 230/400 V – 3 ph – 50
- Supply voltage: 276/480 V - 3 ph - 60 - 2 and 4 poles (motor voltage + 20 %)

Using a 3-phase 50 Hz motor in a 60 Hz supply system with 20 % higher voltage will increase the frequency and therefore the speed by 20 %, but will maintain all the rated motor parameters subject to small variations (U/f law).

Note: If the supply voltage is increased by 15 % compared to the motor voltage, the actual motor output decreases to 92 % of the original motor output.

Supply voltage = 1.2 x rated motor voltage (for motors with 2 and 4 poles)

Motor data			
Power	P	kW	100 %
Rated speed	n_n	1/min	120 %
Rated torque	M_n	Nm	100 %
Starting torque	M_A	Nm	100 %
Pull-up torque	M_S	Nm	100 %
Pull-out torque	M_K	Nm	100 %
Rated current	I_N	A	102 %
Starting current	I_A	A	100 %
Power factor	cos φ		100 %
Efficiency	η		98 %

Supply voltage	**Motor rated**
230/480 V	230/400 V
3 ph	3 ph
60 Hz	50 Hz

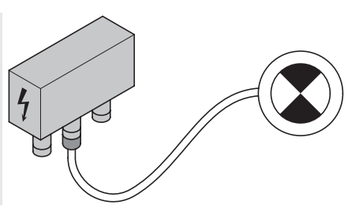

© 2017 INTERROLL

© 2017 INTERROLL

Interroll offers a wide range of industrial solutions for its drum motors. In this chapter, only the most important solutions will be explained.

General logistics

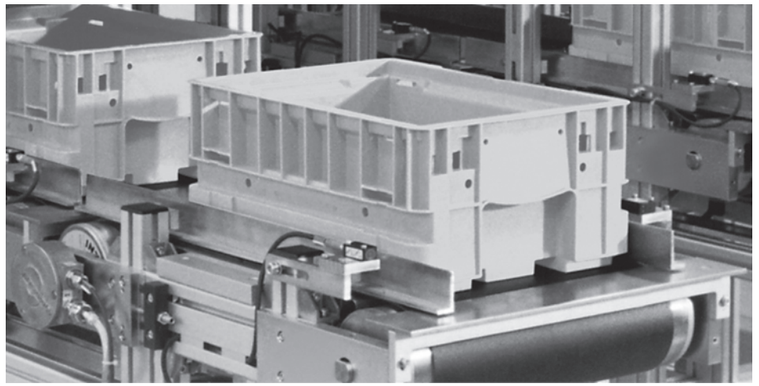

Conveying in logistics, warehousing and storage sectors covers a wide spectrum of applications in industries, such as electronics, chemicals, food, automotive and general manufacturing. All motors in this catalog are suitable for general logistics applications.

High performance and dynamic conveying

Modern Industry today expects high efficiency and increased productivity as well as fast bus communication between zones and zero maintenance. Interroll provides the perfect drives for high performance applications that typically use smart belts, packaging machines, weighing

© 2017 INTERROLL

machines and sorting equipment. This type of equipment requires high torque, fast acceleration/deceleration, dynamic braking and bus communication. If more control is needed, the motor can be fitted with an encoder to run it as a servo-drive.

Food processing

Interroll Drum Motors are ultra-hygienic and easy to clean. All drum motors for food processing comply with EC 1935-2004 and FDA. NSF-compliant motors are available on request. Interroll is a member of the EHEDG (European Hygienic Engineering Design Group).

Consider the ambient conditions before choosing drum motor versions, options and accessories.

Suitable drum motors
- For friction drive belts use an asynchronous drum motor.
- For positive drive belts use either a drum motor for applications with positive drive belts or no belts, or an asynchronous drum motor with frequency inverter.
- A synchronous drum motor can also be used for all applications.

Torque transmission
For moist or wet food applications with friction drive belts Interroll recommends rubber lagging on the drum motor to improve the friction between the belt and drum shell. In continuously wet conditions, longitudinal grooved lagging can be used to dissipate the water flow and improve the grip.

© 2017 INTERROLL

Options and accessories
- Stainless steel or other materials approved for food or hygienic applications.
- Drum motors for food processing are supplied with food-grade oil.
- Interroll offers a variety of hot-vulcanized lagging materials approved for use in food processing (FDA and EC 1935/2004).
- Hot-vulcanized NBR and molded PU lagging has a longer service life, withstands higher torques and is easier to keep clean than cold-vulcanized lagging.

Conveyor frame
EHEDG design rules recommend the use of rust-free open conveyor frames to facilitate easy cleaning, wash down and disinfection of the conveyor, drum motor and belt. The drum motor should be mounted in the conveyor frame in such a way that there is no metal-on-metal contact between motor shaft and frame support, e.g. by using a rubber seal between shaft and frame support. The sealing material shall be FDA and EC 1935/2004 compliant.

Cleaning Materials
Cleaning specialist Ecolab has certified a 5-year minimum lifetime of materials used for Interroll Drum Motors when exposed to typical cleaning and disinfecting procedures using Ecolab's Topax range of products: P3-topax 19, P3-topax 686, P3-topax 56 and P3-topactive DES.

Airport logistics

Airport applications, such as conveyors at check-in, X-Ray machines and scanning equipment, require low noise and frequent starts and stops. Most applications use friction drive belts made of PU, PVC or rubber.

© 2017 INTERROLL

A belt conveyor is designed primarily to transport or transfer materials from one place to another. In its simplest form, a belt conveyor normally consists of a longitudinal frame with a drum motor at one end and an idler pulley at the other end around which a continuous belt revolves. The belt, which carries the materials, can be supported either by rollers or a steel, wood or plastic slider bed. This chapter on design guidelines is subdivided into two sections: friction drive belt conveyors and positive drive belt conveyors, since each type requires a different method of torque transfer.

Friction drive belt conveyors

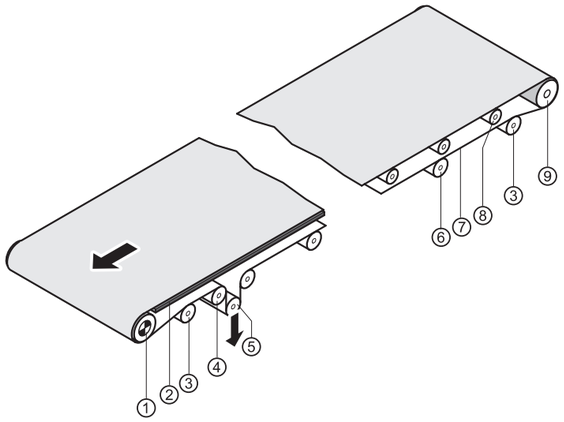

1 Drum motor
2 Slider bed
3 Tie-in roller
4 Steering idler
5 Tensioning roller
6 Support roller
7 Conveyor belt
8 Carrying idler
9 Idler pulley

Friction drive belt conveyors, e.g. rubber, PVC or PU flat belts, rely on high friction between the drum motor and belt and sufficient belt tension in order to transmit the torque from the drum motor to the belt. For typical friction factors, refer to the table page 89.

Torque transmission

Normally the steel crowned shell of the drum motor is sufficient to transmit the torque but care must be taken not to over-tension the belt, which could damage the drum motor shaft bearings or even the belt itself.

© 2017 INTERROLL

Belt tension

The conveyor belt should only be tensioned in line with the manufacturer's recommendations and the tension should only be enough to drive the belt and load without belt slip. Over-tensioning can damage the drum motor and belt. Maximum belt tensions for the drum motors can be found in the product pages of this catalog.

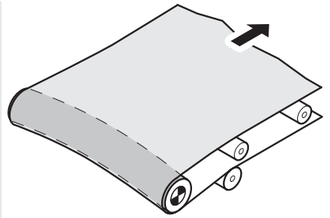

Fig.: Damaged drum motor due to over-tensioning

Lagging

To improve the torque transmitted from the drum motor to the belt, rubber lagging can be applied to the drum shell to produce more grip.

A smooth lagging or a lagging with diamond pattern is well suited for dry applications. It is also possible to use laggings with grooves or other laggings. Longitudinal grooved lagging is advisable to dissipate water in food processing or wet applications. Diamond patterned lagging can be used for non-food wet applications.

When external belt tracking devices are installed, cylindrical shells can be used to prevent opposing influences.

Additional friction factor

Depending on the belt material, the friction between conveyor belt and drum motor can vary.

Consider the following friction factors when calculating the belt tension:

Drum motor surface	Conditions	Belt material			
		Frictioned rubber	PVC	Polyester fabrics	Impregnation with Ropanol
Steel	Dry	0.25	0.35	0.20	0.25
	Wet	0.20	0.25	0.15	0.20
Smooth lagging	Dry	0.30	0.40	0.25	0.30
Grooved lagging	Wet	0.25	0.30	0.20	0.25

© 2017 INTERROLL

Belt wrap angle

There is another way to improve the torque transmitted from the drum motor to the belt: You can increase the angle of belt wrap around the drum motor. The belt wrap angle is measured in degrees. A larger belt wrap angle gives better traction between the belt and drum motor, and the belt requires less belt tension. A minimum angle of 180° is generally recommended to transfer the full torque to the belt. Increasing the angle to 230° or more is indeed possible to reduce the belt tension and, therefore, the wear of drum motor and belt.

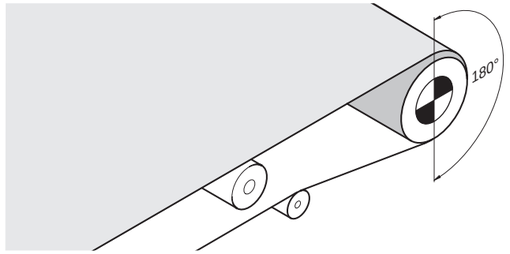

Fig.: Minimum belt wrap angle for friction drive belt conveyors

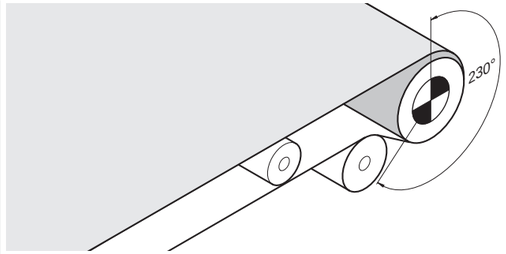

Fig.: Increased belt wrap angle for friction drive belt conveyors

Roller bed conveyor

Due to their lower friction, roller bed conveyors require less power, less belt tension and are therefore more efficient than slider bed conveyors. Roller bed conveyors are especially suitable for longer conveyors with heavy loads.

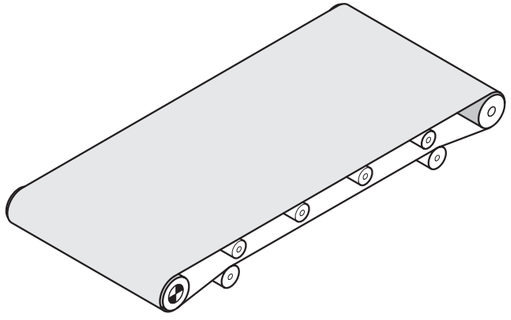

Fig.: Roller bed conveyor

Slider bed conveyor

Belt conveyors using a slider bed have more friction and require higher power and belt tension than belt conveyors with rollers and are therefore less efficient. However, the transported goods lie on the belt with greater stability. Due to its simple construction, it is a lower cost option than the roller bed conveyor.

© 2017 INTERROLL

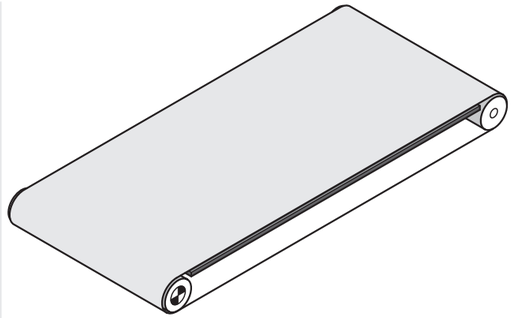

Fig.: Slider bed conveyor

Drive positions

The drum motor is usually positioned at the head or discharge end of the conveyor but can be positioned elsewhere to suit the application or design.

Head drive

The head drive positioning (discharge end) is the most common and preferred option for non-reversible conveyors and is ideal because it is simple to design and easy to install. Furthermore most of the belt tension is on the carrying side and allows the drum motor to transfer its full torque to the belt.

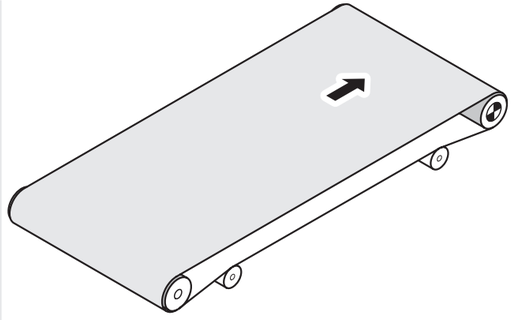

Fig.: Non-reversible conveyor with head drive

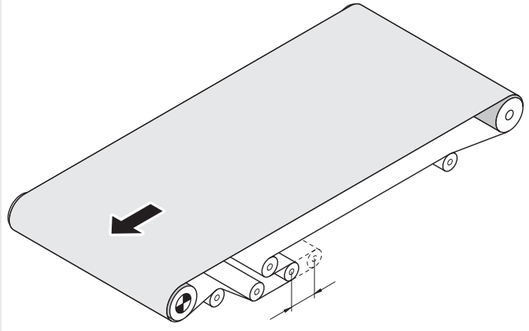

Fig.: Optional design for non-reversible long conveyor with center take-up

© 2017 INTERROLL

Tail drive
A conveyor's tail end (loading or receiving end) is not the ideal drive position as the drum motor is pushing the carrying side of the belt and more tension is applied to the return side. Therefore, the full torque of the drive may not be applied. This type of drive can lead to belt waves (belt lifting on the top side), jumping and undesirable belt wander. If a tail drive is necessary, it is recommended only for use with short friction drive belt conveyors of 2 to 3 meters in length with light loads. (It is not recommended for positive drive belts.)

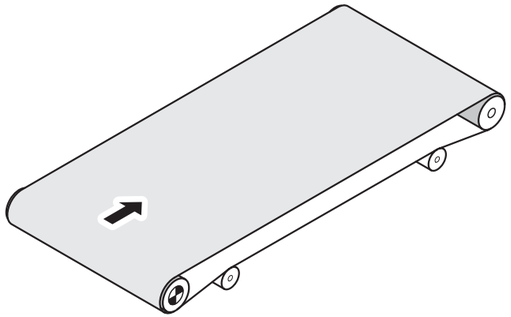

Fig.: Short friction drive belt conveyor with tail drive

Center drive
A center drive can be used for longer belt conveyors where a large diameter drum motor is required and there is insufficient space available at the head end. The center drive can also be used for reversible conveyors because the belt tension is distributed more evenly between the carrying and return side of the belt. Belt tracking issues for forward and reverse operation can be minimized.

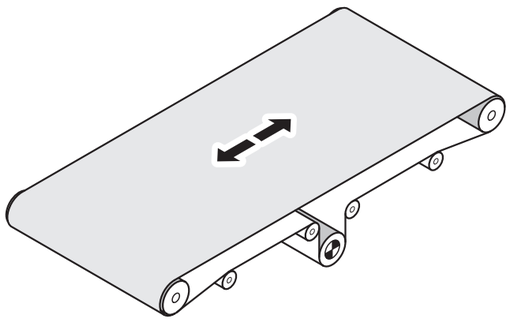

Fig.: Long belt conveyor with center drive

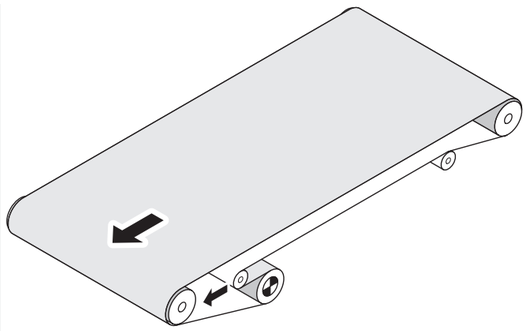

Fig.: Center drive for long belt conveyor with increased belt wrap

© 2017 INTERROLL

Reversible drive
Interroll Drum Motors are suitable for reversing unless fitted with a backstop. However, the motor control must be designed in such a way that the drum motor is brought to a complete standstill before reversing, otherwise serious damage to the gear box could occur. Drum motors with a backstop may be used only for conveying in one direction. The direction is indicated by an arrow on the end housing.

Positive drive belt conveyors

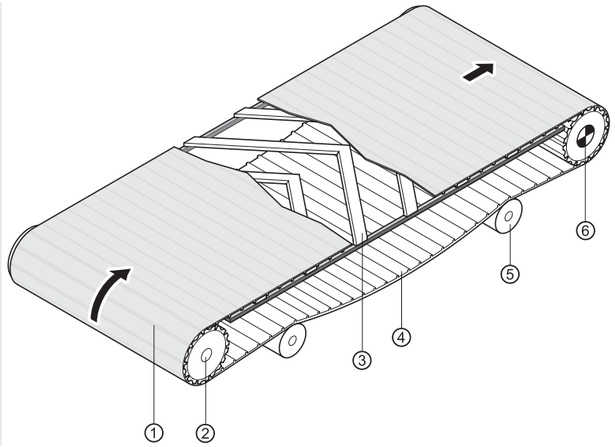

1 Modular plastic belt
2 Idler pulley with sprockets
3 Support slats
4 Catenary sag
5 Support rollers
6 Drum motor

Positive drive belt systems have a lower power consumption than friction drive belts, enabling longer conveyor constructions. As there is no belt tension, there is less stress on the drum motor bearings. Since the belt has no direct contact with the drum shell, the heat dissipation is less effective in these applications. For this reason, the drum motor should be used with a frequency inverter that is optimized for this application. Alternatively, motors for applications with positive drive belts or no belts can be used.

Examples of positive driven belts include the following:

- Modular plastic belts
- Positive drive solid homogeneous belts
- Steel slatted belts
- Steel mesh or wire belts
- Toothed belt
- Chain conveyors

Positive drive belt installations can be quite complex and are not discussed in detail in this catalog. Please refer to the belt supplier's instructions and contact Interroll if further advice is required.

© 2017 INTERROLL

Torque transmission

Drum motors for positive drive belt conveyors are normally supplied with full-width machined rubber lagging that engages the profile of the conveyor belt on the underside. Alternatively, a cylindrical drum shell with a laterally welded key can be supplied enabling any type of steel, stainless steel or plastic sprocket wheels to be fitted to the shell. The number of sprockets depends on the belt width and load but there must be a minimum of three. The calculation of the number of sprockets required can be found in the belt manufacturer's catalog. Due to the thermal expansion of the belt, all sprockets supplied by Interroll are floating and therefore it may be necessary to guide the belt using side guides built into the conveyor frame in order to achieve a center belt tracking. As an alternative, Interroll can supply a fixed sprocket positioned in the center of the belt.

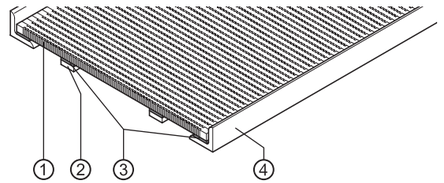

1 Belt
2 Support slats
3 Wear strips
4 Side supports/side guides

Fig.: Belt tracking

Belt tension

Due to its positive drive, the conveyor belt generally requires no belt tension and uses only the gravity from its own weight to engage the lagging or sprocket profile. On the return side, the belt should hang loose to accommodate the changing length of the belt due to thermal expansion and contraction. The installation and conveyor design should comply with the belt manufacturer's recommendations.

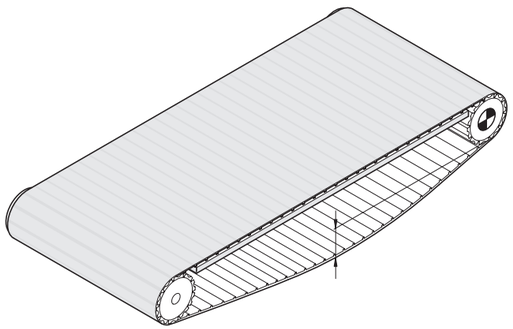

Fig.: Short conveyor without support rollers on the return belt

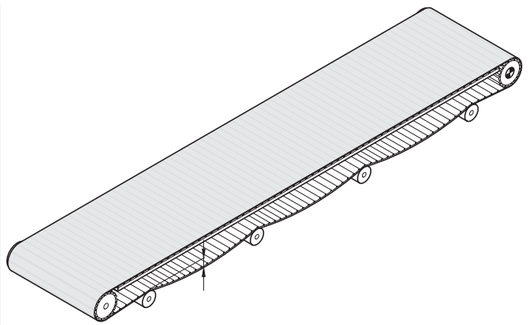

Fig.: Medium and long conveyor with catenary sag and support rollers on the return belt

© 2017 INTERROLL

Velocity factor

The increased diameter of the drum motor when fitted with lagging or sprockets will affect the rated speed of the motors shown in this catalog. In order to calculate the final belt speed, please use the following calculation. The velocity factor VF can be found in the Options section, page 43.

$$V_{belt} = V_{dm} \times VF$$

V_{belt} = Belt speed
V_{dm} = Rated speed of drum motor
VF = Velocity factor

The torque is transmitted directly from the drum shell via the lagging or indirectly through the key and sprockets to the belt. This transfers up to 97 % of the mechanical output onto the belt. In start-stop applications, the use of a soft start function or frequency inverter will increase the lifespan of the belt, sprockets and gear box.

Belt pull correction factor

When using lagging or sprockets, the rated belt pull of the drum motor will be reduced. The actual belt pull is calculated as follows:

$$\text{Corrected belt pull} = \text{Rated belt pull}/VF$$

Drive positions

For positive drive belt conveyors either a head drive or center drive is possible.

Head drive

The drum motor should be positioned at the head (discharge end) of the conveyor so that the carrying side of the belt is pulled under tension.

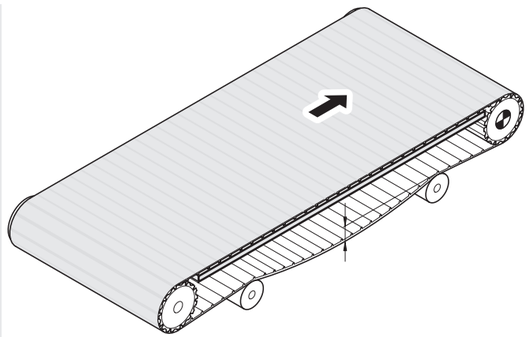

Fig.: Head drive for positive drive belt conveyors

Tail drive

Tail drives are not recommended. If the drum motor is located at the tail end (loading side) of the conveyor and attempts to push the belt, then the belt tension at the return belt is greater than at the carrying side of the belt. The belt "jumps" over the profile of the lagging or the sprockets and forms buckles in the excessive belt length – a safe transport of the material is no longer ensured.

Center drive

Center drives can be used for long unidirectional conveyors or for reversible conveyors. In the case of reversible conveyors, great care and attention is required for their design. Please contact the belt manufacturer for advice.

Other conveyors

Inclined conveyors

Inclined conveyors require more power and higher belt tension than horizontal conveyors to move the same load. A backstop should be considered for single direction inclined conveyors to prevent rollback of the belt and load.

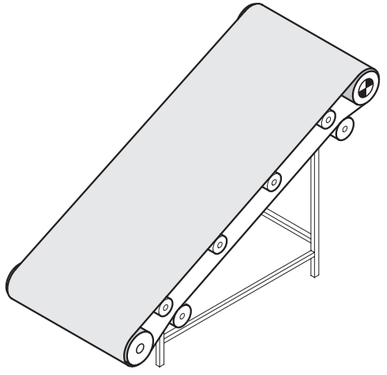

Fig.: Inclined conveyor

Reversible inclined or declined conveyors

An electromagnetic brake should be considered to prevent accidental reversal and rollback of the belt and load. To reduce acceleration and over-run of the belt and load on a declined conveyor calculate the power required as for an inclined conveyor.

© 2017 INTERROLL

Knife-edge conveyors

Knife edges reduce the gap between the transfer points of two conveyors. However, with friction drive belt conveyors, knife edges can severely increase the belt pull and tension required to overcome the increased friction between belt and knife edge. To reduce this friction the belt transfer angle should be increased as much as possible and a roller with a small diameter should replace the knife edge.

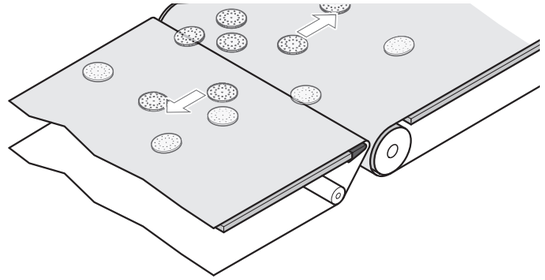

Fig.: Knife-edge conveyor

Food processing conveyors

EHEDG design rules recommend the use of rust-free open conveyor frames to facilitate easy cleaning, wash down and disinfection of the conveyor, drum motor and belt.

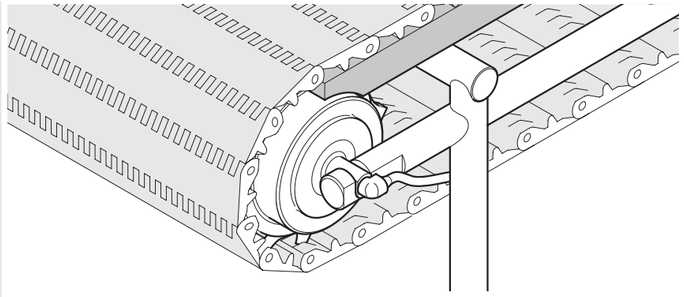

Fig.: Open conveyor design for hygienic cleaning

Plough and diverter units

If the drum motor is installed in a plough or diverter unit, it is frequently installed in a vertical position. This requires ordering a special motor design.

© 2017 INTERROLL

Frequent starts/stops

Frequent starts and stops can cause thermal overload of the motor and premature wear of the gear box, reducing the lifespan of the drum motor. In applications such as these, Interroll recommends the use of a frequency inverter to optimize the heat loss of the motor and a soft-start function to reduce the start-up load on the gear box. Synchronous or asynchronous drum motors with a frequency inverter are ideal for these applications.

Control systems

Interroll supplies brakes, backstops, encoders and frequency inverters for its range of drum motors.

What drive control system do you need?

As with any drive system, when you select a drum motor, you also must decide on the type and scope of control you will need to optimize your application. You should therefore select a motor and control system that ensures efficient and trouble-free operation right from the outset. Interroll offers a series of user-friendly drive and control solutions in its standard product range.

Control guide matrix

	AC asynchronous motors		AC permanent magnet synchronous motors	
	Direct connection to power supply	Frequency inverter from third parties	Frequency inverter from third parties or servo driver	Frequency inverter or servo driver recommended by Interroll
Direct connection to power supply	●			
Voltage-controlled frequency		●		
Sensorless vector control		●	●	●
Control loop closed		●	●	●

Speed setting

The drum motor and therefore the conveyor belt speed will be influenced by the load, belt tension and rubber lagging thickness. Speeds provided in the product pages are based on rated load and accurate to ±10 %; for more accurate speeds use a frequency inverter/drive control to overcome these influences. For precise speeds use a frequency inverter/drive control combined with an encoder or other feedback device. Frequency inverters can also be used with asynchronous motors to increase the rated speed. However, the available torque will then be reduced starting at a frequency of 50 Hz. Synchronous drum motors with a suitable frequency inverter will offer solutions for most of these issues and can increase performance, throughput and efficiency.

For asynchronous drum motor brakes and backstops, see page 51.

© 2017 INTERROLL

Merges transfers and in-feed control

For asynchronous drum motors use a frequency inverter with DC braking (with or without encoder) to control the merge process. Alternatively, for precise, dynamic control and/or high throughput, use a synchronous drum motor.

Feedback system

Use an integrated encoder or other feedback device for precise speed and positioning data (see page 58).

Operating modes

The following operating modes comply with IEC 60034-1.

Continuous running duty S1

Operation at constant load which is long enough to reach a thermal steady-state condition.

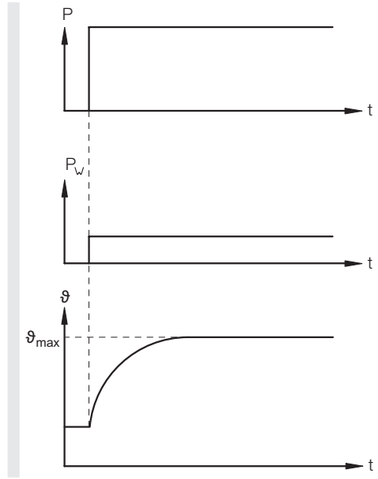

P = Power input
P_W = Electrical losses
ϑ = Temperature
$ϑ_{max}$ = Max. temperature achieved
t = Time

The majority of Interroll Drum Motor windings with an efficiency of over 50 % are suitable for operating mode S1 and continuous running duty. Please refer to the electrical data tables for standard motors and motors for applications with positive drive belts or no belts. The value is listed with the symbol η for efficiency.

© 2017 INTERROLL

S2 to S10

For operating modes S2 to S10, consider the duty cycles and consult Interroll.

Mounting requirements

Horizontal mounting

A drum motor is normally mounted horizontally – parallel to the idler pulley and perpendicular to the conveyor frame – to ensure that the belt will run centrally without belt wander.

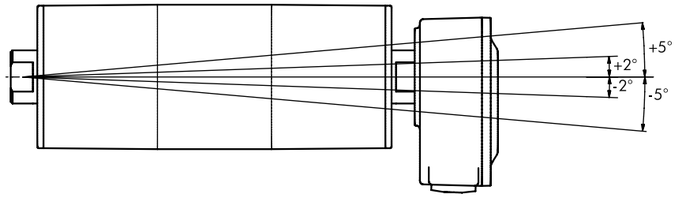

All drum motors must be mounted within ±5° of the horizontal.

Non-horizontal mounting

This requires a special motor design. The cable connection must always be at the top and a specific volume of oil is also needed for non-horizontal drum motors.

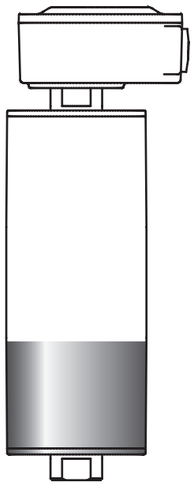

© 2017 INTERROLL

Examples
- Carton turning
- Plough transfer units
- Deflector conveyors

Mounting brackets

The mounting brackets must be strong enough to withstand the drum motor belt pull and its start-up torque. They must be fully supported and fastened to the conveyor frame so that the shaft ends do not move or deform. Shaft end key flats must always be fully supported by the brackets.

Use the mounting brackets specified for each drum motor model – see accessories starting at page 62.

Axial play

The axial play between the shaft key flats and the mounting brackets must be 1.0 mm to allow for component heat expansion.

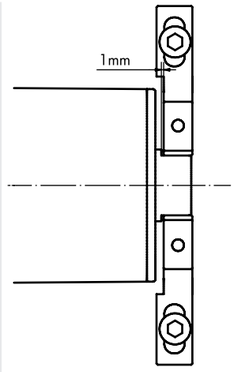

Fig.: Maximum axial play

© 2017 INTERROLL

Torsion play
The torsion play between the shaft key flats and the mounting brackets must be no more than 0.4 mm.

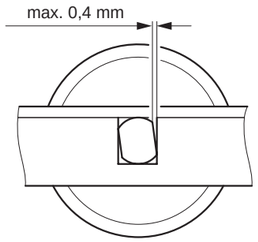

Fig.: Maximum torsion play

There must be no clearance between the shaft key flats and mounting bracket if the drum motor is to be used for frequent reversible operations or a large number of starts and stops.

Supported length
At least 80 % of the key flats must rest on the mounting bracket.

Other mounting devices
The drum motor can also be installed directly in the conveyor frame without mounting brackets. In this case, the shafts must rest in recesses in the conveyor frame that have been reinforced accordingly to meet all of the conditions listed above.

Belt adjustment

Drum motors for friction drive belts are normally supplied with crowned shells in order to ensure central belt tracking and prevent misalignment of the belt during operation. However, the belt must be checked and adjusted at its initial start up and maintained as necessary.

Diagonal check
The conveyor side frames must be parallel to each other and level on both sides ensuring the drum motor fits exactly at 90 degrees square to the frame.

This can be checked using the following procedure:

- The difference in length of the two diagonals must not be more than 0.5 %.
- The diagonals are measured from the drum motor shaft to the idler pulley shaft or from belt edge to belt edge.

© 2017 INTERROLL

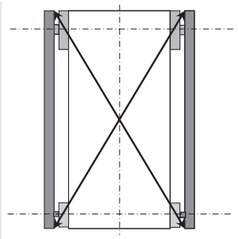

Fig.: Diagonal check

Belt position
The underside of the belt should be flush with the conveyor slide or roller bed and must not be more than 3 mm above these.

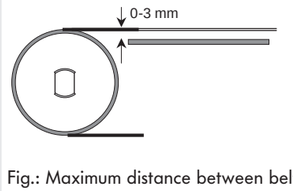

Fig.: Maximum distance between belt and conveyor bed

Misaligned drum motors, belts or idler pulleys may cause high friction and overheat the drum motor. This may also result in premature wear of the belt and lagging.

Belt pull

The rated belt pull, power and speed for each drum motor version are shown in this catalog.

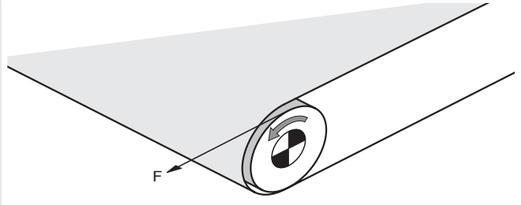

© 2017 INTERROLL

You can calculate the belt pull F using the following formulas.

The formulas are only intended as guidelines since they are based on typical operating conditions. The effect of additional friction from the following factors is not taken into account:

- Hoppers
- Rubber seals
- Cleaning devices, such as ploughs, scrapers and brushes
- Friction between the product and side guides

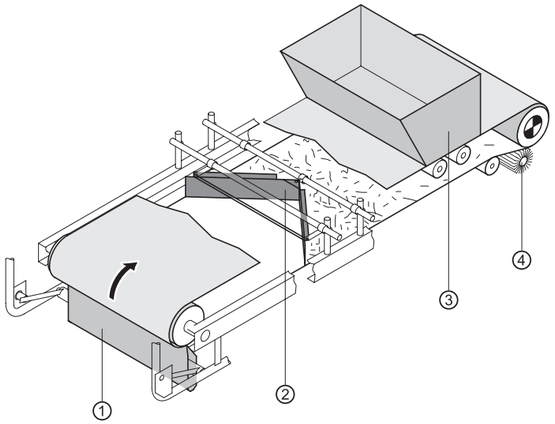

1 Scraper
2 Plough
3 Hopper
4 Brush

Belt pull calculation (F)

$$F=F_0+F_1+F_2+F_3+\text{safety factor}$$

Please add a safety factor of 20 % to this calculation.

© 2017 INTERROLL

Conveying system	Roller bed conveyor	Slider bed conveyor	Double slider bed conveyor
Force without load	$F_0= 0.04 \cdot g \cdot L \cdot (2\ P_n + P_{pr})$	$F_0= g \cdot L \cdot P_n \cdot C_2$	$F_0= g \cdot L \cdot P_n (C_2 + C_4)$
Force to convey materials horizontally	$F_1=0.04 \cdot g \cdot L \cdot P_{m1}$	$F_1=g \cdot L \cdot P_{m1} \cdot C_2$	$F_1=g \cdot L \cdot (P_{m1} \cdot C_2 + P_{m2} \cdot C_4)$
Force to convey materials on incline	$F_2=g \cdot H \cdot P_{m1}$*	$F_2=g \cdot H \cdot P_{m1}$*	$F_2=g \cdot H \cdot (P_{m1} - P_{m2})$*
Accumulation	$F_3=g \cdot L \cdot P_{m1} \cdot C_1$	$F_3=g \cdot L \cdot P_{m1} \cdot C_1$	$F_3=g \cdot L \cdot (P_{m1} \cdot C_1 + P_{m2} \cdot C_3)$

P_n in kg/m	=	Belt weight per meter
P_{pr} in kg/m	=	Weight of rotating parts of the belt conveyor (carrying and return section) per meter length
P_{m1} in kg/m	=	Weight of the conveyed product on the carrying section, for each meter of length of the belt conveyor
P_{m2} in kg/m	=	Weight of the conveyed product on the return section, for each meter of length of the belt conveyor
C_1	=	Coefficient of friction between product and carrying side **
C_2	=	Coefficient of friction between carrying side and slider bed **
C_3	=	Coefficient of friction between return side and product **
C_4	=	Coefficient of friction between return side and slider bed **
L in m	=	Center-to-center length
H in m	=	Height difference in conveyor
F_0 to F_3 in N	=	Belt pull components for operating conditions shown
g in m/s^2	=	9.81

* The value F_2 is negative with declined conveyors. However, to prevent over-run acceleration due to gravity,F_2 should be positively calculated as for inclined conveyors.

** Information about friction factors page 89.

© 2017 INTERROLL

Coefficient of friction

Belt material	Slider bed material C_2, C_4		Product material C_1, C_3		
	PE	Steel	Steel	Glass, Technopolymer	Technopolymer
PE	0.30	0.15	0.13	0.09	0.08
PP	0.15	0.26	0.32	0.19	0.17
POM	0.10	0.20	0.20	0.15	0.15
PVC/PU		0.30	0.30		0.30
Polyamide or polyester		0.18	0.18		0.17
Rubber	0.40	0.40	0.40		0.40

Belt tension

The following must be observed when calculating the belt tension:

- Length and width of conveyor belt
- Belt type
- Check the belt tension required to transport the load
- Check the belt elongation necessary for the installation. Depending on the load, the belt elongation for the assembly should be between 0.2 – 0.5 % of the belt length.
- The values for the belt tension and elongation are available from the belt manufacturer.
- Ensure that the required belt tension does not exceed the maximum belt tension (TE) of the drum motor.

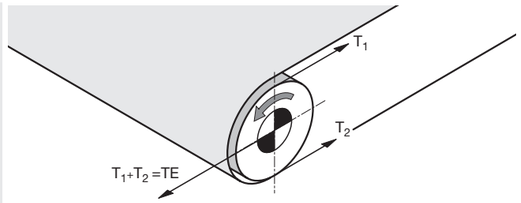

The required belt tension T1 (top side) and T2 (bottom side) can be calculated in accordance with DIN 22101 or the CEMA standard. Based on the information from the belt manufacturer, the actual belt tension can be roughly determined by a measurement of the belt elongation during tensioning.

The maximum allowable belt tension (TE) of each drum motor is specified in the drum motor tables in this catalog. Belt type, belt thickness and drum motor diameter must match the information from the belt manufacturer. If the diameter of the drum motor is too small, damage to the belt can result.

© 2017 INTERROLL

If the belt tension is too strong, it can damage the shaft bearings and/or other internal components of the drum motor and shorten the service life of the product.

Belt elongation

The belt tension is created by the force of the belt when it is stretched in longitudinal direction. To prevent damage to the drum motor, it is absolutely necessary to measure the belt elongation and to determine the static belt tensioning force. The calculated belt tension must be equal to or lower than the values specified in the drum motor tables in this catalog.

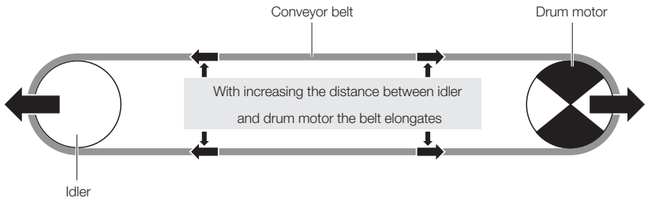

Fig.: Belt elongation

Measuring the belt elongation

The belt elongation can very easily be determined using a measuring tape. Mark the not-tensioned belt on two points in the belt center, where the outer diameter of the drum motor and idler pulley is the biggest due to the crowning. Measure the distance between the two marks parallel to the belt edge (Be0). The longer the distance between the two marks, the more precise the measurement of elongation will be. Now start to tension the belt and adjust it. Once the belt is adjusted and tensioned measure the distance between the two marks again (Be). The belt elongation increases the distance.

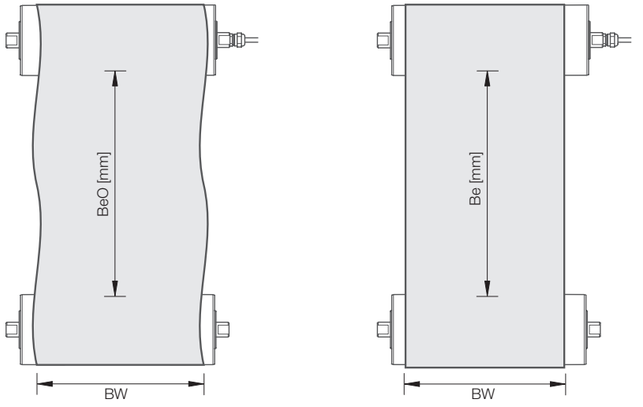

Fig.: Measuring the belt elongation

© 2017 INTERROLL

Belt elongation calculation

With the belt elongation measurement you can calculate the belt elongation in %.

$$B_{e\%} = \frac{B_e \cdot 100\%}{B_{e0}} - 100$$

Fig.: Formula for calculating the belt elongation in %

For the calculation of belt elongation, the following values are needed:

- Belt width in mm (BW)
- Static force per mm belt width with 1 % elongation in N/mm (k1 %). This value is usually given in the belt data sheet or can be requested from the belt supplier.

$$TE_{[static]} = BW \cdot k1\% \cdot B_{e\%} \cdot 2$$

Fig.: Formula for calculating the static belt tensioning force in N

Load and loading method

- Consider the method of loading, such as a feed conveyor, hopper loading or shock loading, and adjust the required belt pull and belt tension accordingly
- Consider the type and length of the load with regard to specific point loads and ensure that the weight of the point load (in Newtons) never exceeds the maximum belt tension (TE) of the drum motor.

Drum motor diameter

- Choose the drum motor with the smallest diameter, but with due consideration of all application parameters and ambient conditions
- Check the minimum flexing diameter allowed for the belt and choose the drum motor diameter accordingly

All belts have a safe minimum diameter for normal or back flexing when used with drum motors or idler pulleys. Always refer to the belt manufacturer's specification for this information and choose the drum motor diameter accordingly, otherwise serious damage to the belt or drum motor may result. If the drum motor diameter is too small, insufficient torque will be transmitted to the belt and belt slip or "jumping" may occur.

© 2017 INTERROLL

To illustrate: The belt shown below has cross cleats and side frames and requires a larger diameter of drum motor than would be required for a plain flat belt.

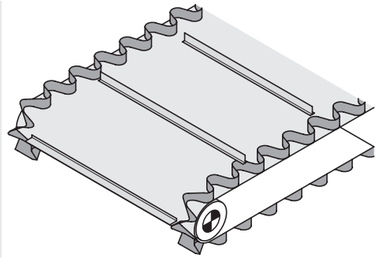

Single phase asynchronous motors

Single phase AC motors are typically used when 3-phase voltage is not available.

Principle

Single phase AC motors have a main winding and an auxiliary winding to create a rotating field. The phase shift between the main and auxiliary phase is created by a permanently connected running capacitor.

Starting torque/starting capacitors

The starting torque can be very limited because of the imperfect rotating field:

- The starting torque of a 3-phase AC motor is typically 120 – 410 % of rated torque
- The starting torque of a 1-phase AC motor is typically 65 – 115 % of rated torque

Some 1-phase AC motors – especially in the higher power range – need an additional starting capacitor to reach a starting torque of 150 – 200 % of the rated torque. This starting capacitor should be the same size as the running capacitor and has to be switched parallel to it. This should be done ideally via a current-dependent switch relay during the start-up sequence of the motor. When the right torque/current has been reached, the starting capacitor is switched off by the relay. The capacity value of the running capacitor is always stated on the motor type label.

Noise

1-phase motors generally have a higher noise level at zero-load operation compared to 3-phase motors, because of the difference in the rotating field. Typically there is an erratic noise that increases steadily. This does not affect the operation of the drum motor and will normally disappear when belt tension is applied or the drum motor is run under load. Claims cannot be accepted due to this noise effect.

© 2017 INTERROLL

Capacitors and relays

All capacitors must be ordered separately for single phase drum motors. A suitable current-dependent relay to convert the starting capacitor to a running capacitor can be supplied if needed. For more information, please contact your Interroll customer consultant. The correct installation of the starting capacitor is shown in the wiring diagram supplied with the drum motor.

Interroll strongly recommends the use of 3-phase motors, since they are more efficient and save energy. Improved efficiency can be achieved by using a 3-phase motor with a frequency inverter. If a single phase supply is the only option, consider using a 3-phase motor together with a frequency inverter that converts the single phase input voltage into a 3-phase output voltage.

Standard Interroll capacitors	Article number
3 µF	1100692
4 µF	1000477
6 µF	1100821
8 µF	1100724

Note: Capacitors can have different service lives. Use only B rated capacitors.

Final design steps

Before deciding on the final design, additional factors, such as the motor's switching frequency, still must be taken into account. When using an asynchronous drum motor for stop/starts of more than one per minute, a frequency inverter with a ramp time ≥ 0.5 s should be considered. Alternatively, use a synchronous drum motor and frequency inverter. Choose the drum motor version with the required belt pull, belt tension, diameter and speed for your application. If you cannot find the required speed in the drum motor tables, use a frequency inverter and choose the drum motor version with the closest speed or contact Interroll. The Belt Drive Matchmaker at www.interroll.com provides support in the selection of the correct drum motor.

© 2017 INTERROLL
© 2017 INTERROLL

Protection rate

Interroll Drum Motors DM 0080 are provided with IP69k protection by default.

Protection against solid bodies		Protection of internal equipment against harmful ingress of water	
IP, first number	**Definition**	**IP, second number**	**Definition**
5	Dust-protected	4	Protected against spray water
6	Dust-tight	5	Protected against water jets (P1 nozzle 6.3 mm, water delivery rate 12.5 l/min ±5 %)
		6	Protected against water jets similar to marine swells (P2 nozzle 12.5 mm, water delivery rate 100 l/min ±5 %)
		7	Ingress of water in quantities causing harmful effects shall not be possible when the enclosure is temporarily immersed in 1 m water under standardized conditions of pressure and time
		9k	Protected against the effects of high-pressure liquids: • Test with fan nozzle • Test unit on turntable (5 revolutions/minute) • Water delivery rate 14 – 16 l/min • Water pressure about 8,000 to 10,000 kPa at 80 ± 5 °C with a duration of 30 s per position • Water aimed at the housing with increased pressure from any direction must not have any damaging effect

Lagging

NBR

This type of synthetic rubber has good wear characteristics, excellent resistance to oil, fuel, and other chemicals. On top of that, it is also easy to clean. Its resilience makes NBR the perfect material for the rubber lagging of drum motors. It can be used in most material handling applications. NBR withstands temperatures from -40 to +120 °C, nitrile rubber is generally resistant to aliphatic hydrocarbons but, like natural rubber, can be attacked by ozone, aromatic hydrocarbons, ketones, esters and aldehydes. White NBR is accepted for the food processing industry and is offered with FDA and EC1935/2004 approval.

PU

PU represents any polymer consisting of a chain of organic units joined by urethane (carbonate) links. It is tear-resistant and is superior to rubber. Polyurethane has outstanding resistance to oxygen, ozone, sunlight and general weather conditions. Most PU formulations offer an extremely long lifespan, good resistance to heat and cold at temperatures of between -35 and +80 °C and is offered with EC 1935/2004 and FDA approval.

Note: Minimum PU thickness 4 mm, maximum shell length (SL) 1,200 mm.

© 2017 INTERROLL

Hot vulcanization

Hot vulcanized NBR rubber lagging can be used to increase friction between the drum motor and conveyor belt for high torque applications and to reduce belt slip. Alternatively, it can be profiled to drive modular belts and other special applications. Due to the high temperature of the process, the lagging must be applied to the shell before the drum motors are assembled. The result is a very strong bonded rubber, suitable for high torque applications and completely sealed to the shell. This method guarantees a long service life and is recommended for hygienic applications.

NBR profiled lagging is not recommended for use with solid homogeneous belts due to the high friction that can cause the belt to jump.

Cold vulcanization

Cold vulcanized NBR rubber lagging is used to increase the friction between the drum shell and belt in order to reduce belt slip. The cold process requires a special adhesive (cement) to glue the lagging onto the drum shell. Cold vulcanized white NBR is approved by the FDA. The lagging follows the original shape of the drum shell (crowned or cylindrical) and is not machined afterwards. However, the process can be applied quickly to finished assembled drum motors and therefore is a quick and easy solution.

MATERIAL SPECIFICATION

Certifications

Interroll Drum Motors can be offered certified and approved according to UL 1004 for the North American market and cUL for the Canadian market.

Interroll Drum Motors for use in the food processing industry are EHEDG-compliant. The materials meet the requirements of the FDA, EC 1935/2004 and Ecolab. Cleaning specialist Ecolab has certified a 5-year minimum lifetime of materials used for Interroll Drum Motors when exposed to typical cleaning and disinfecting procedures using Ecolab's Topax range of products: P3-topax 19, P3-topax 686, P3-topax 56 and P3-topactive DES.

COMPETENCE CENTER
for drum motors

The Interroll Competence Center in Baal (near Düsseldorf) concentrates on drum motors that are employed as drive solutions in belt conveyors in food processing and other systems of internal logistics as well as various branches of industry. In this product sector, the company is responsible within the global Interroll Group for all technical concerns ranging from development and application engineering to production and support for local Interroll companies. The production area also includes the Coating Center for rubber-coated drum motors, which are intended for the hygienic production lines of the food industry.
Visit www.interroll.com to find your local contact person.

Interroll Trommelmotoren GmbH
Opelstr. 3 | 41836 Hückelhoven/Baal |
Germany Tel.: +49 (0)2433 44610

LEGAL NOTICES

Contents
We strive for the information presented to be correct, up to date and complete. We have carefully worked out the contents of this document. However, we assume no liability for the information. We expressly deny any liability for damages or consequential damages that are connected in any form with the use of this document. We reserve the right to change the documented products and product information at any time.

Copyright / Intellectual Property Right
Texts, images, graphics and the like as well as their arrangement are protected by copyright and other protection laws. Reproduction, modification, transfer or publication of any part or the entire content of the document in any form is prohibited. This document is intended exclusively for information purposes and for intended use and does not authorize replicating the respective products. All identification symbols used in this document (protected trademarks, such as logos and commercial designations) are the property of Interroll AG or their respective owners and may not be used, copied or disseminated without prior written permission.

© 2017 INTERROLL

About Interroll
Established in 1959, Interroll has grown to become the world's leading supplier of key products for internal logistics. Whether boxes, pallets or soft goods are to be handled, no other supplier has such a complete product range on offer. That is why system integrators, OEMs and operators select Interroll as their partner for their internal logistics business. Worldwide. The Interroll global network ensures quick delivery and superior service for every local customer. We inspire our customers and provide opportunities for them to increase efficiency.

interroll.com

INSPIRED BY EFFICIENCY