Application area
Control of RollerDrive EC310 in applications without start-stop operation, e.g. in roller curves. Mechanical engineering applications. Applications with PLC, but without fieldbus. Small applications with max. 10 RollerDrive.

Product description
The DriveControl 20 is a simple control for the RollerDrive EC310. It does not contain any logic (e.g. for zero-pressure accumulation conveying) and requires external signals.

DIP switches can be used to set the direction of rotation, a start and braking ramp and the speed in 15 increments. Digital inputs and outputs serve as interface to a higher-level control. This enables setting the direction of rotation and the speed in 7 increments, e.g. from a PLC. The braking energy of the RollerDrive EC310 is fed back into the 24-V supply system. The voltage fed back from the RollerDrive EC310 is limited at 30 V by means of the integral brake chopper (voltage-dependently switched load resistance).

Functions
- Speed setting (DIP switches 15x, digital input 7x)
- Selection of direction of rotation (via DIP switches or digital input)
- Error signal output
- Status display with LEDs
- Voltage limitation via brake chopper

CONTROLS
DRIVECONTROL 20
Control for the RollerDrive EC310

Technical data

Electrical data	
Rated voltage	24 V DC
Temporarily permissible voltage range	19 to 26 V DC
Current consumption*	DriveControl: approx. 0.1 A Rated current per RollerDrive: approx. 2 A Startup current per RollerDrive: approx. 4 A
Fuse	Present, non-replaceable
Protection rate	IP20
Ambient conditions	
Ambient temperature in operation	0 to +40 °C
Ambient temperature during transport and storage	−40 to +80 °C
Max. installation height above sea level**	1000 m
Cable cross-sections	
Power supply	Fine-wired, 1.5 mm^2 (AWG 16)
Inputs/outputs (I/O)	Fine-wired, 0.08 to 0.5 mm^2 (AWG 28 to 20)

* The effective current in the application depends on the conveyor weight, conveyor speed and number of cycles.

** The installation in systems at an altitude above 1,000 m is possible. However, this can lead to a reduction of the performance values.

CONTROLS
DRIVECONTROL 20
Control for the RollerDrive EC310

Dimensions

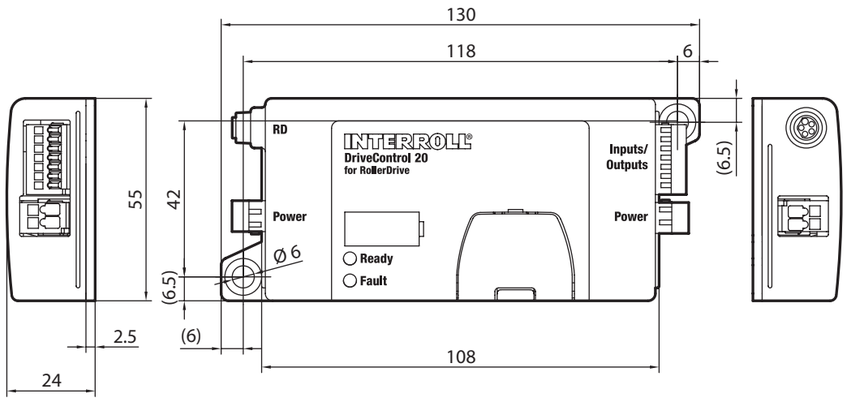

Accessories

- RollerDrive EC310 extension cable, page 242
- PowerControl power supply, page 236

Ordering information

- Article number: S-1001415
- Scope of supply: 2 plugs for voltage supply, 1 plug for inputs and outputs, polymer tool for cabling